SM 13G-AJ NB

Linear bushing

TYPE: Shaft guidance systems, Linear bushing, Standard, Adjustable type, Type SM..AJ, Asian standard, Plastic cage (NB)

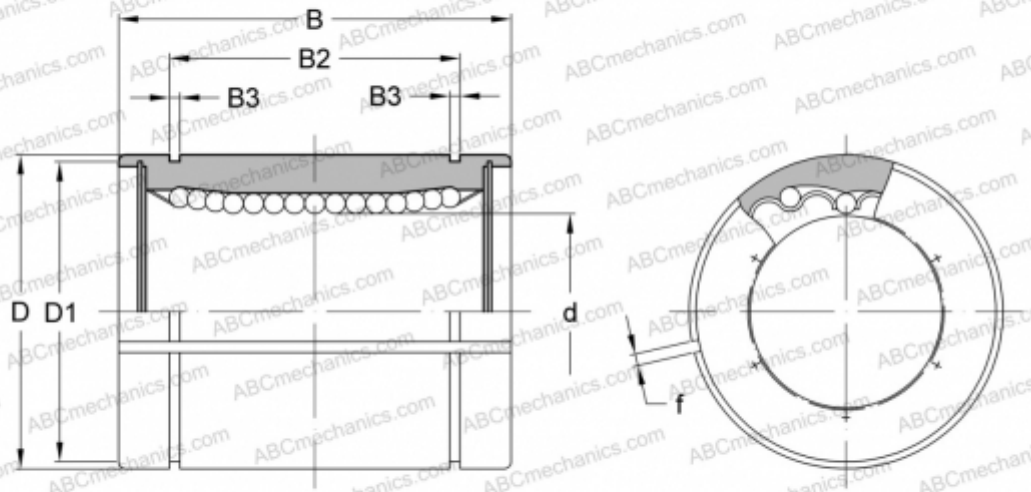

Technical specification

DIMENSIONS, MM	
d	13,000
D	23,000
B	32,000
D1	22,000
B2	23,000
B3	1,300
f	1,500
WEIGHT, KG	0,048
MANUFACTURER	NB