SM 40G-OP NB

Linear bushing

TYPE: Shaft guidance systems, Linear bushing, Standard, Open type for support rail, Type SM..OP, Asian standard, Plastic cage (NB)

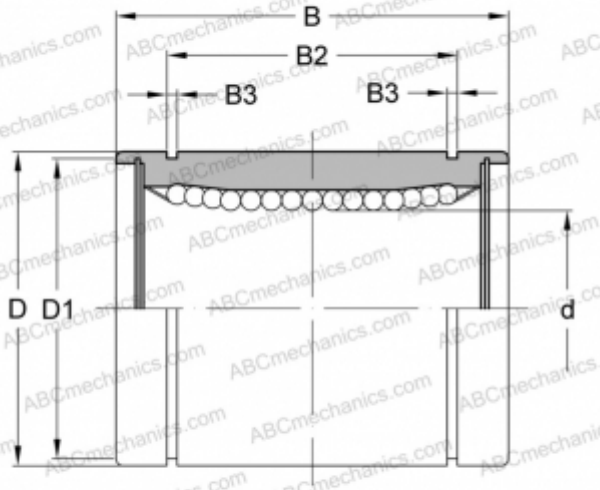

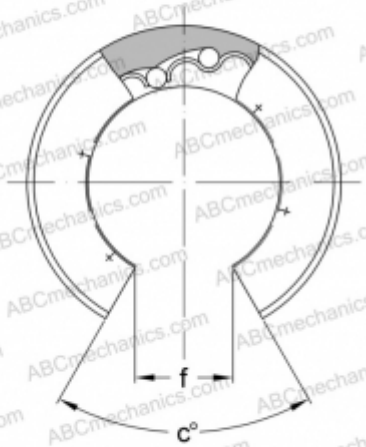

Technical specification

DIMENSIONS, MM	
d	40,000
D	60,000
B	80,000
D1	57,000
B2	60,500
B3	2,100
f	20,000
c	50
WEIGHT, KG	0,546
MANUFACTURER	NB