SMS 50G-OP NB

Linear bushing

TYPE: Shaft guidance systems, Linear bushing, Standard, Open type for support rail, Type SM..OP, Asian standard, Corrosion resistance, Plastic cage (NB)

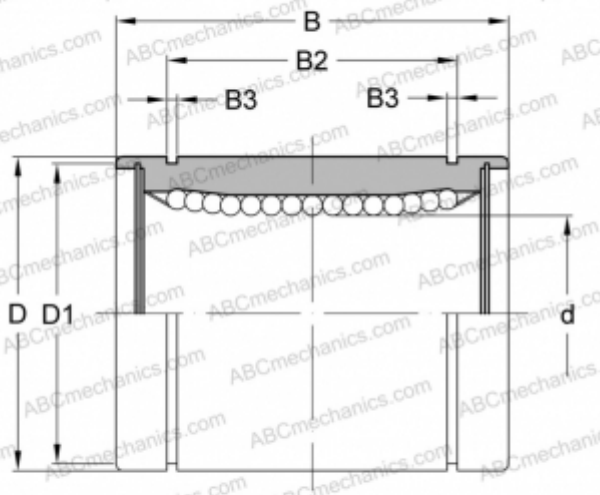

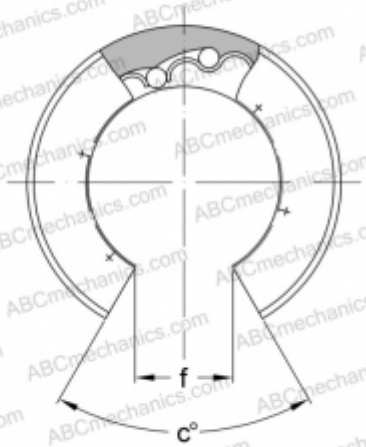

Technical specification

DIMENSIONS, MM	
d	50,000
D	80,000
B	100,000
D1	76,500
B2	74,000
B3	2,600
f	25,000
c	50
WEIGHT, KG	1,420
MANUFACTURER	NB