SMF 40 NB

Linear bushing

TYPE: Shaft guidance systems, Linear bushing, With flange, Circular type, Type SMF, Asian standard, Steel cage (NB)

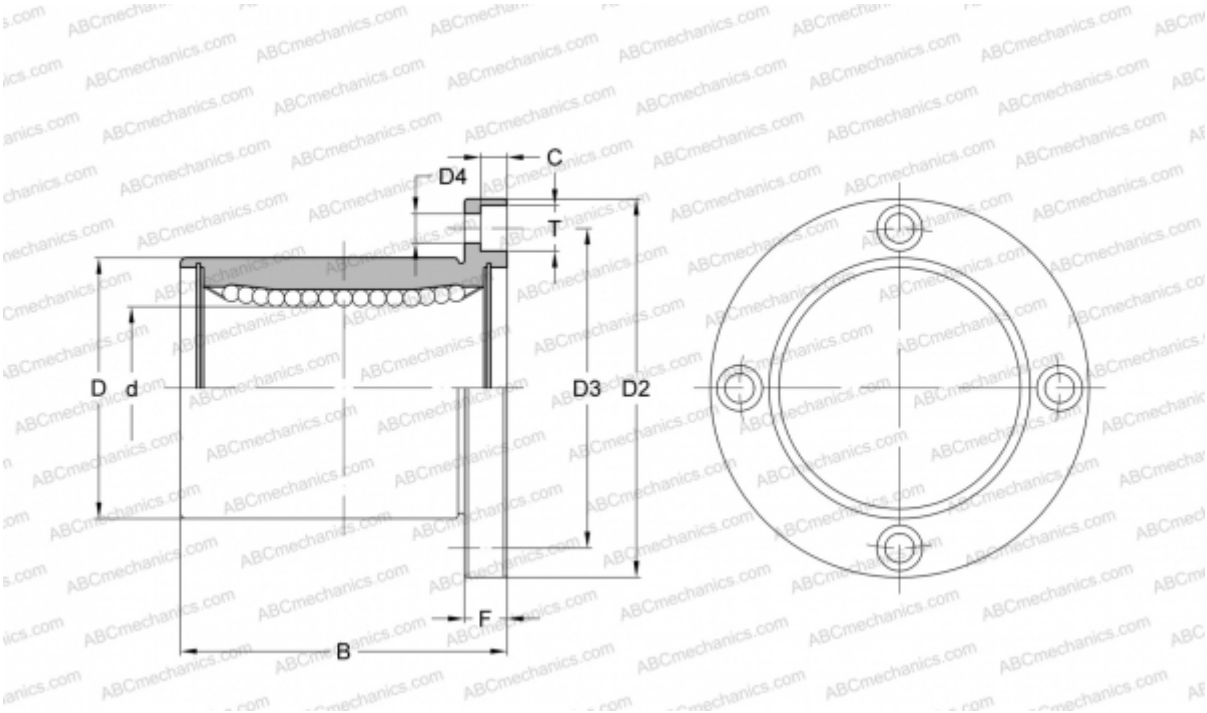

Technical specification

DIMENSIONS, MM	
d	40,000
D	60,000
B	80,000
D2	96,000
D3	78,000
D4	9,000
T	14,000
C	8,100
F	13
WEIGHT, KG	1,060
MANUFACTURER	NB