SMF 16G NB

Linear bushing

TYPE: Shaft guidance systems, Linear bushing, With flange, Circular type, Type SMF, Asian standard, Plastic cage (NB)

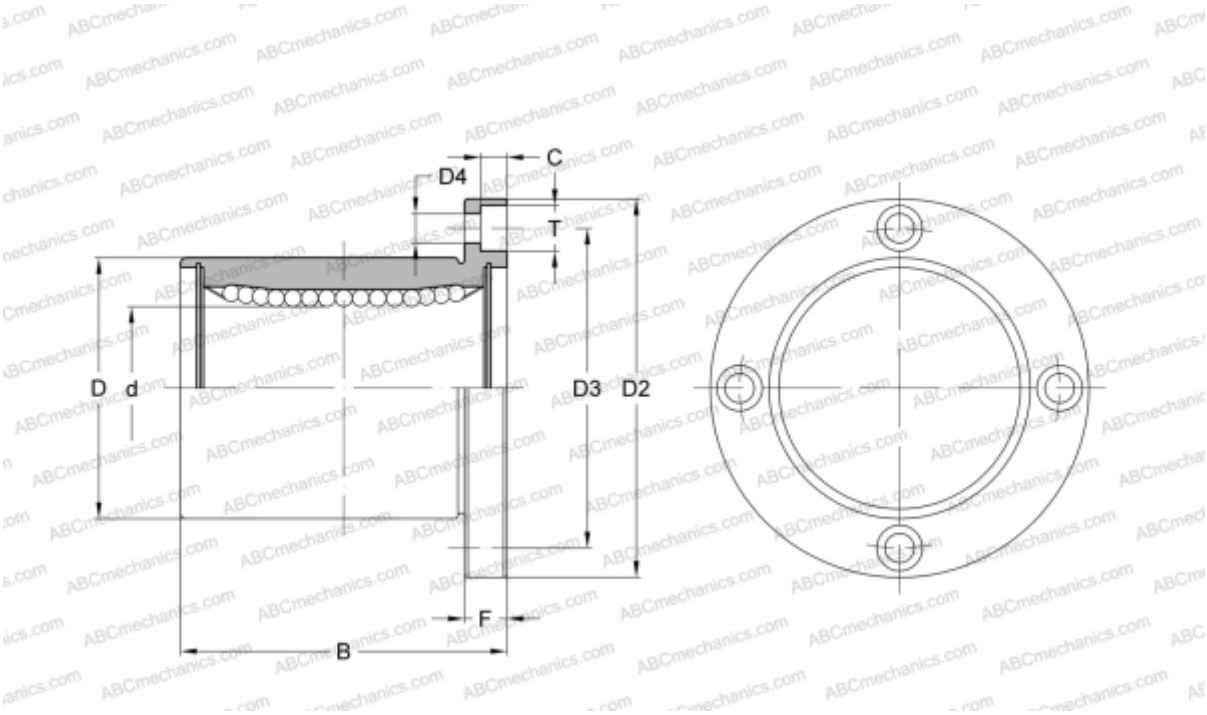

Technical specification

DIMENSIONS, MM	
d	16,000
D	28,000
B	37,000
D2	48,000
D3	38,000
D4	4,500
T	7,500
C	4,100
F	6

WEIGHT, KG	0,120
MANUFACTURER	NB