SMF 25G NB

Linear bushing

TYPE: Shaft guidance systems, Linear bushing, With flange, Circular type, Type SMF, Asian standard, Plastic cage (NB)

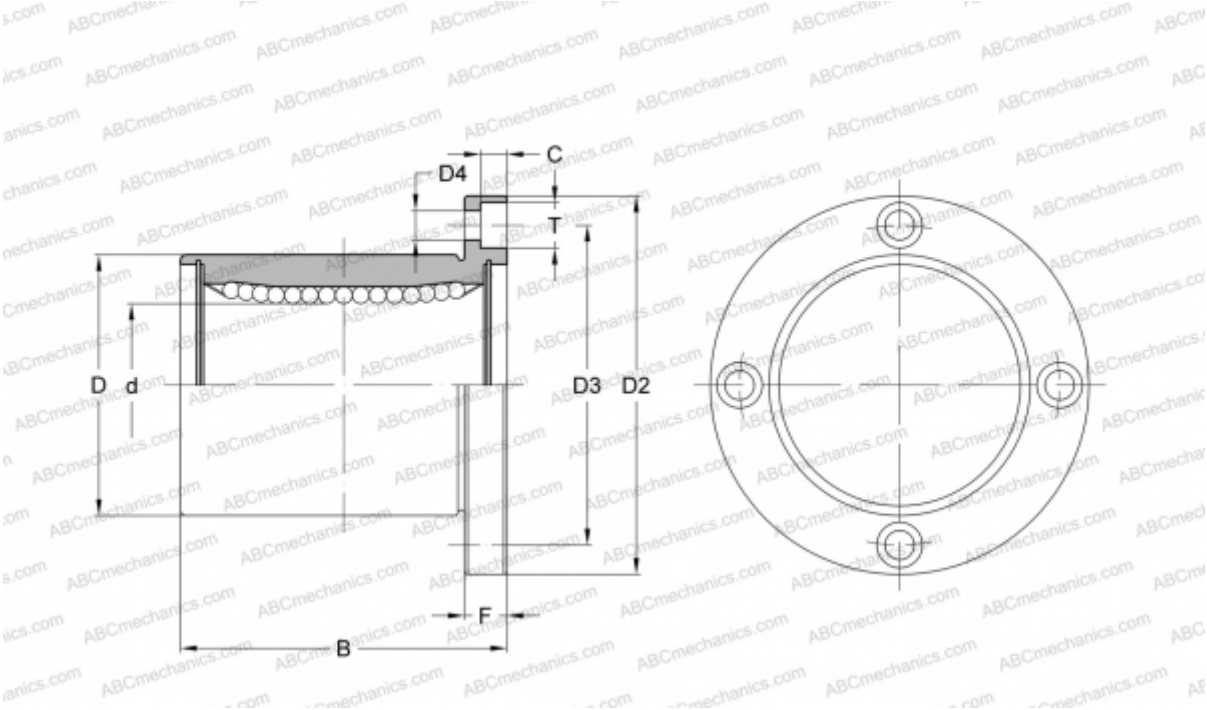

Technical specification

DIMENSIONS, MM	
d	25,000
D	40,000
B	59,000
D2	62,000
D3	51,000
D4	5,500
T	9,000
C	5,100
F	8
WEIGHT, KG	0,340
MANUFACTURER	NB