SMSF 20 NB

Linear bushing

TYPE: Shaft guidance systems, Linear bushing, With flange, Circular type, Type SMF, Asian standard, Corrosion resistance, Stainless steel cage (NB)

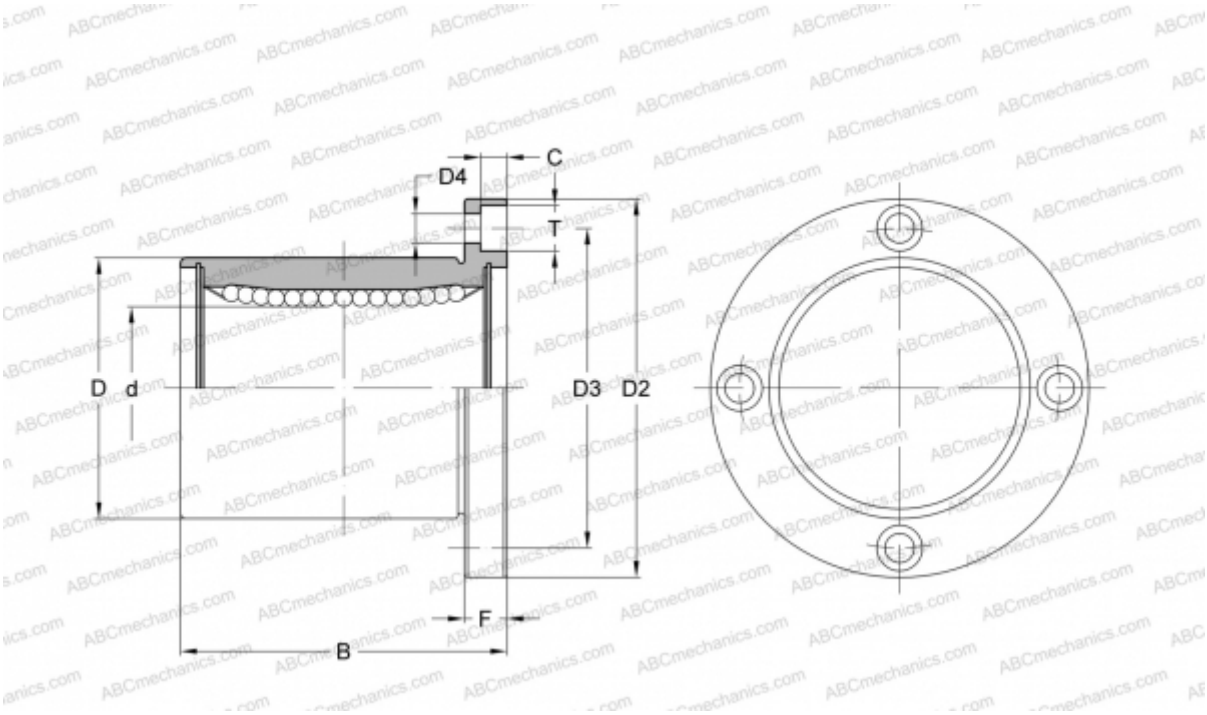

Technical specification

DIMENSIONS, MM	
d	20,000
D	32,000
B	42,000
D2	54,000
D3	43,000
D4	5,500
T	9,000
C	5,100
F	8

WEIGHT, KG	0,180
MANUFACTURER	NB