SMSF 50G NB

Linear bushing

TYPE: Shaft guidance systems, Linear bushing, With flange, Circular type, Type SMF, Asian standard, Corrosion resistance, Plastic cage (NB)

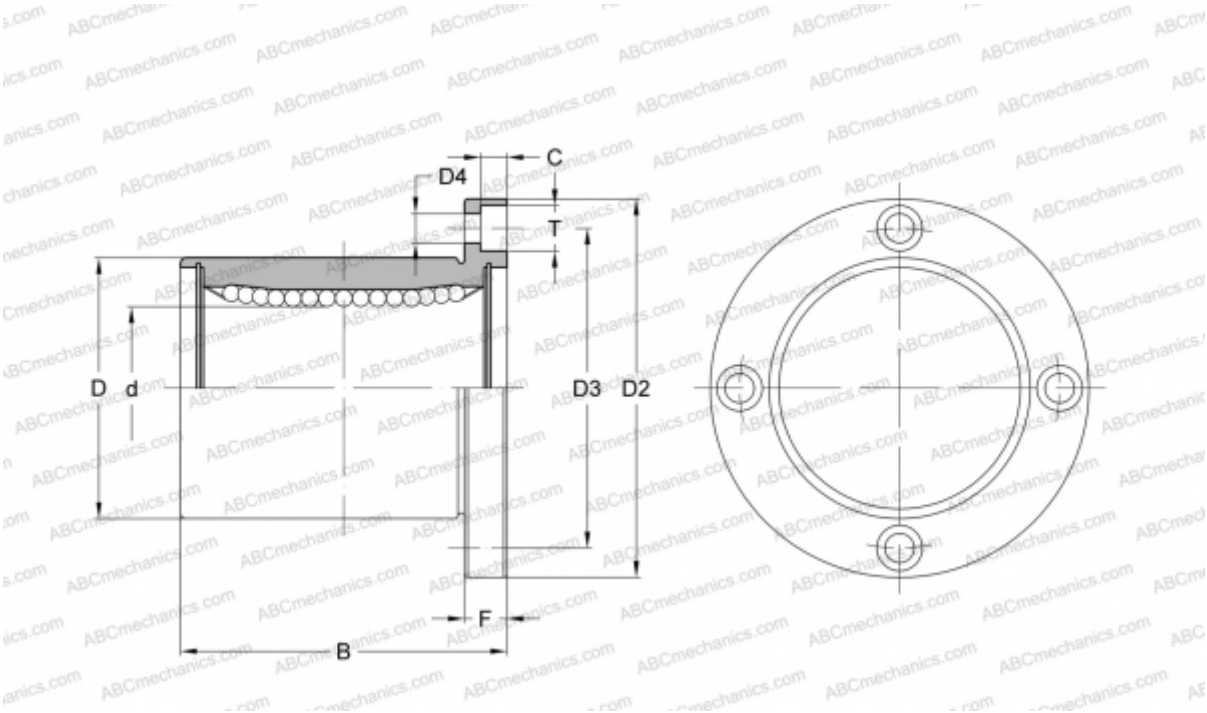

Technical specification

DIMENSIONS, MM	
d	50,000
D	80,000
B	100,000
D2	116,000
D3	98,000
D4	9,000
T	14,000
C	8,100
F	13
WEIGHT, KG	2,200
MANUFACTURER	NB