# SMK 80 NB

Linear bushing

TYPE: Shaft guidance systems, Linear bushing, With flange, Square type, Type SMK, Asian standard, Steel cage (NB)

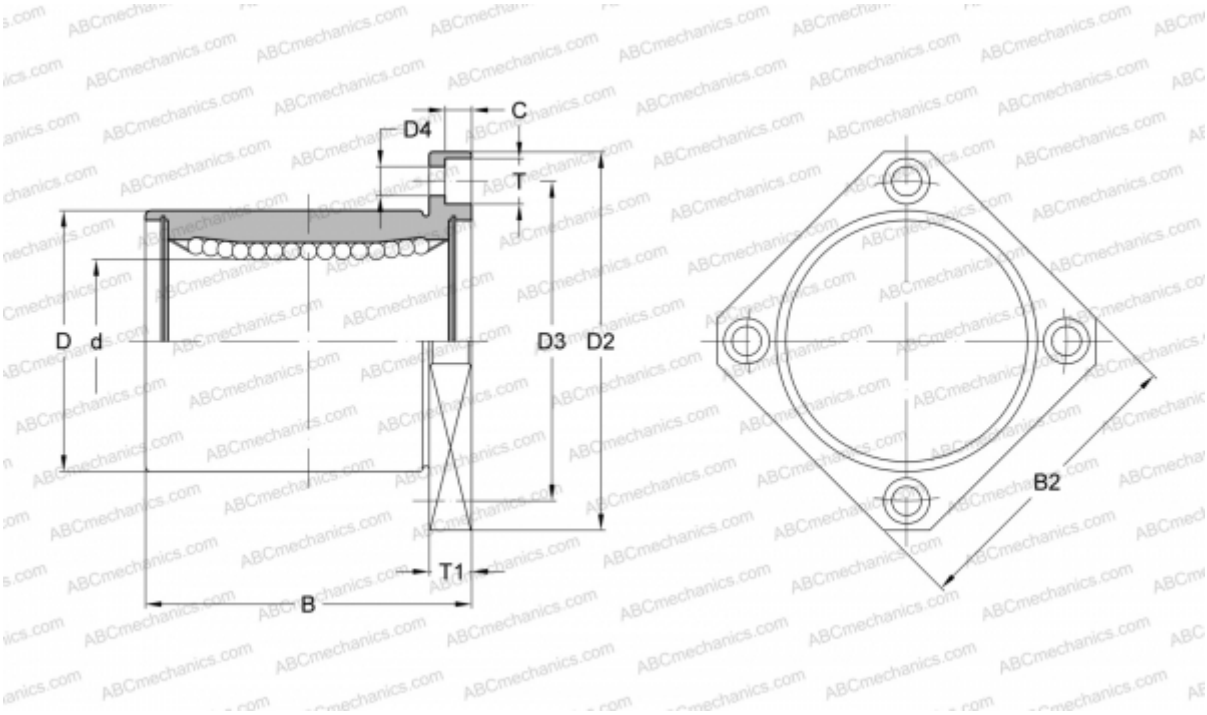


## Technical specification

| DIMENSIONS, MM | |
|---|---|
| d | 80,000 |
| D | 120,000 |
| B | 140,000 |
| D2 | 164,000 |
| D3 | 142,000 |
| D4 | 11,000 |
| B2 | 136,000 |
| T | 17,000 |
| T1 | 18,000 |
| C | 11,100 |
| **WEIGHT, KG** | 5,300 |
| **MANUFACTURER** | NB |