SMSK 6G NB

Linear bushing

TYPE: Shaft guidance systems, Linear bushing, With flange, Square type, Type SMK, Asian standard, Corrosion resistance, Plastic cage (NB)

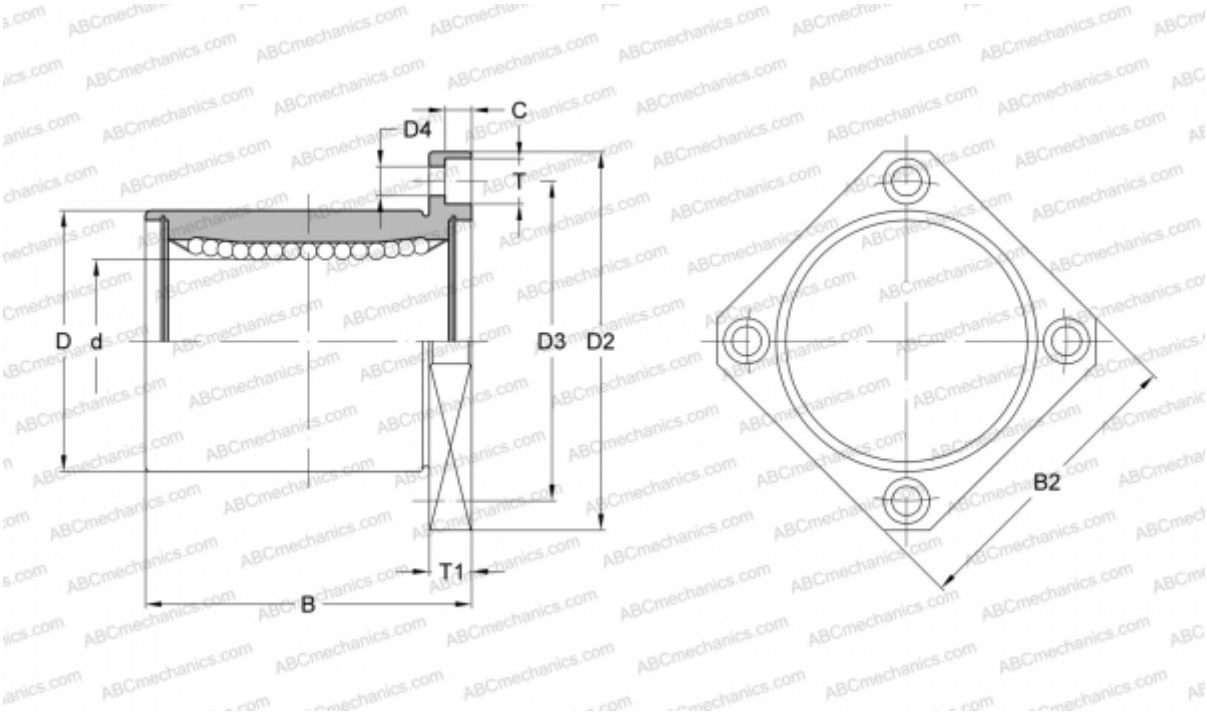

Technical specification

DIMENSIONS, MM	
d	6,000
D	12,000
B	19,000
D2	28,000
D3	20,000
D4	3,500
B2	22,000
T	6,000
T1	5,000
C	3,100
WEIGHT, KG	0,018
MANUFACTURER	NB