SMSK 12GUU-E NB

Linear bushing

TYPE: Shaft guidance systems, Linear bushing, Pilot flange location, Square type, Type SMK..E, Asian standard, Corrosion resistance, Plastic cage (NB)

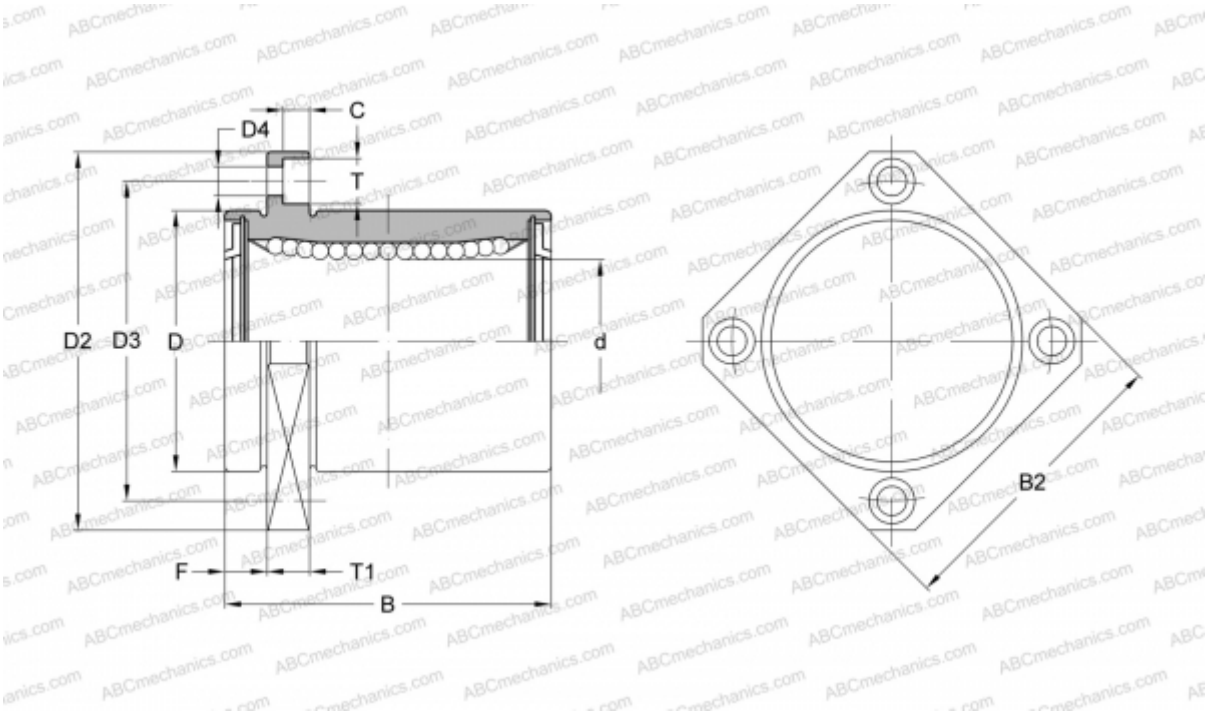

Technical specification

DIMENSIONS, MM	
d	12,000
D	21,000
B	30,000
D2	42,000
D3	32,000
D4	4,500
B2	32,000
T	7,500
T1	6,000
C	4,100
F	6

WEIGHT, KG	0,057
MANUFACTURER	NB