SMF 12W NB

Linear bushing

TYPE: Shaft guidance systems, Linear bushing, With flange, Circular type, double length, Type SMF..W, Asian standard, Steel cage (NB)

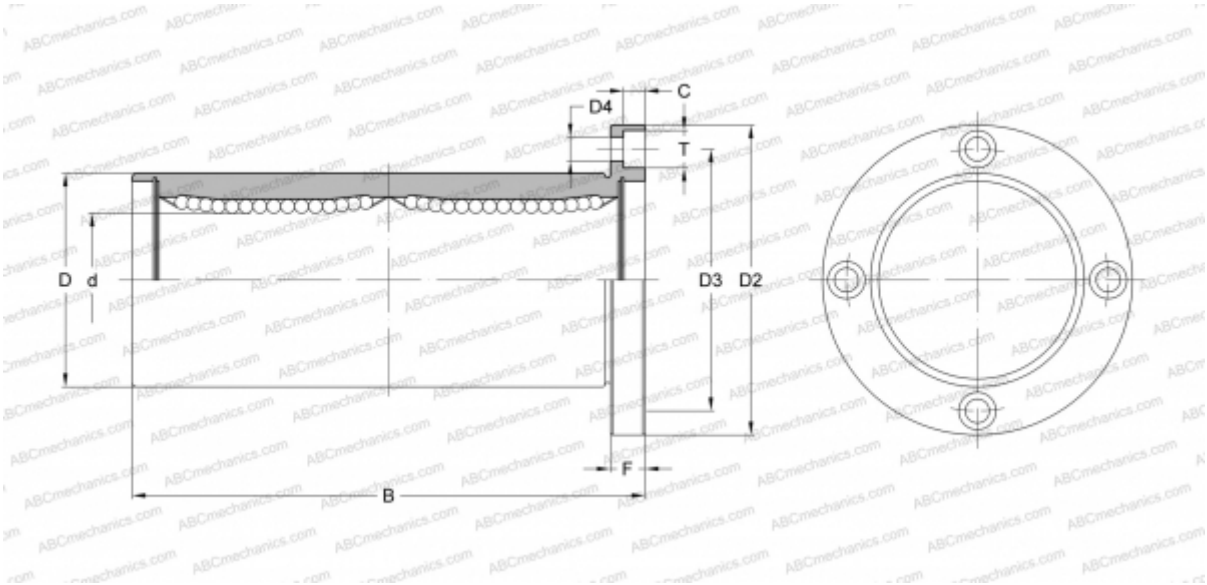

Technical specification

DIMENSIONS, MM	
d	12,000
D	21,000
B	57,000
D2	42,000
D3	32,000
D4	4,500
T	7,500
C	4,100
F	6
WEIGHT, KG	0,110
MANUFACTURER	NB