SMSF 10W NB

Linear bushing

TYPE: Shaft guidance systems, Linear bushing, With flange, Circular type, double length, Type SMF..W, Asian standard, Corrosion resistance, Stainless steel cage (NB)

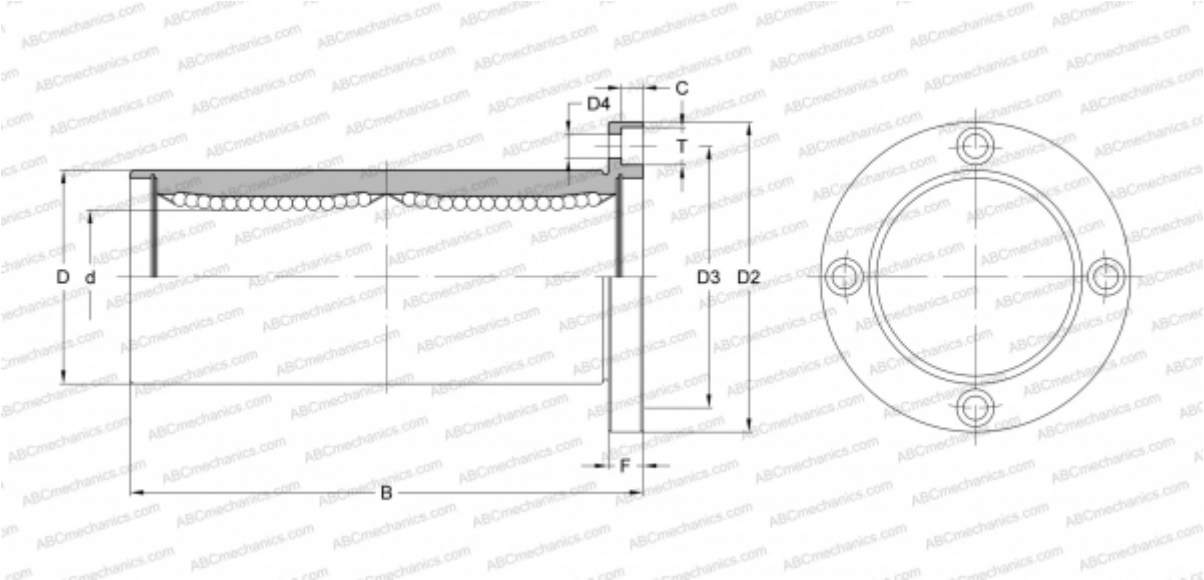

Technical specification

DIMENSIONS, MM	
d	10,000
D	19,000
B	55,000
D2	40,000
D3	29,000
D4	4,500
T	7,500
C	4,100
F	6

WEIGHT, KG	0,098
MANUFACTURER	NB