SMK 50GW NB

Linear bushing

TYPE: Shaft guidance systems, Linear bushing, With flange, Square type, double length, Type SMK..W, Asian standard, Plastic cage (NB)

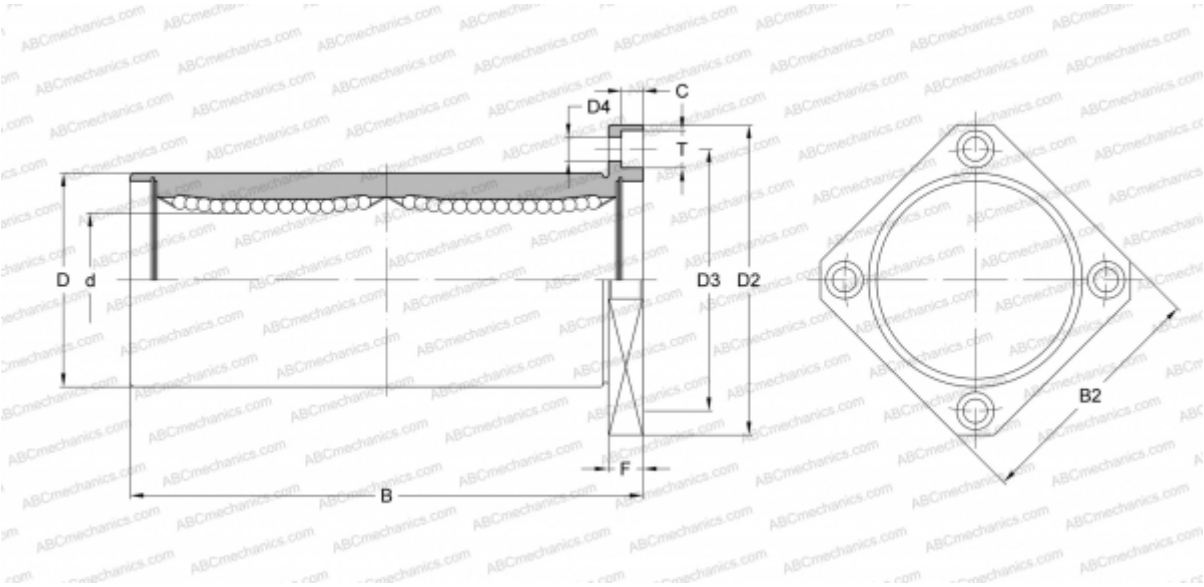

Technical specification

DIMENSIONS, MM	
d	50,000
D	80,000
B	192,000
D2	116,000
D3	98,000
D4	9,000
T	14,000
C	8,100
F	13
WEIGHT, KG	3,400
MANUFACTURER	NB