SMT 6WUU NB

Linear bushing

TYPE: Shaft guidance systems, Linear bushing, With flange, Oval type, double length, Type SMT..W, Asian standard, Steel cage (NB)

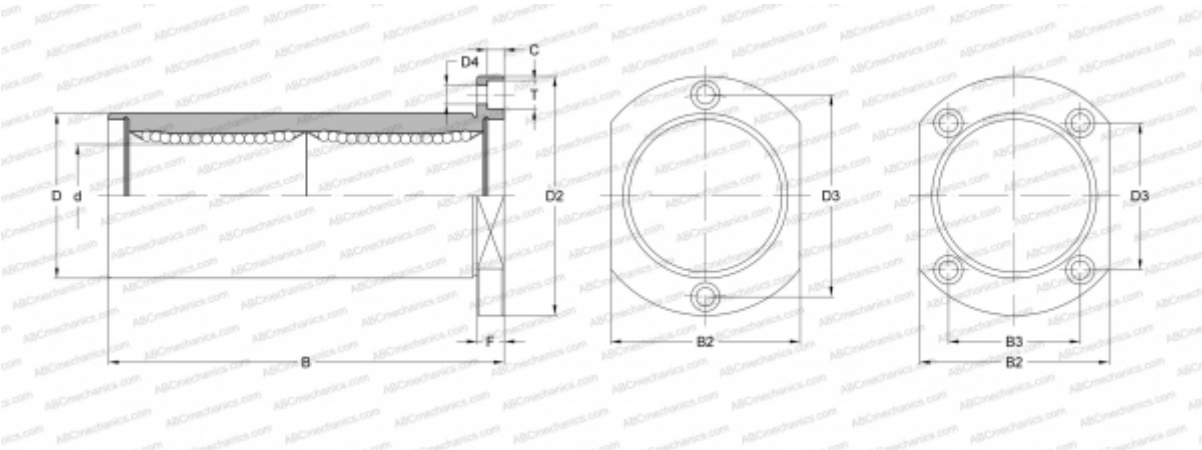

Technical specification

DIMENSIONS, MM	
d	6,000
D	12,000
B	35,000
D2	28,000
D3	20,000
D4	3,500
B2	18,000
T	6,000
C	3,100
F	5
WEIGHT, KG	0,028
MANUFACTURER	NB