SMSKC 25 NB

Linear bushing

TYPE: Shaft guidance systems, Linear bushing, Middle flange location, Square type, Type SMKC, Asian standard, Corrosion resistance, Stainless steel cage (NB)

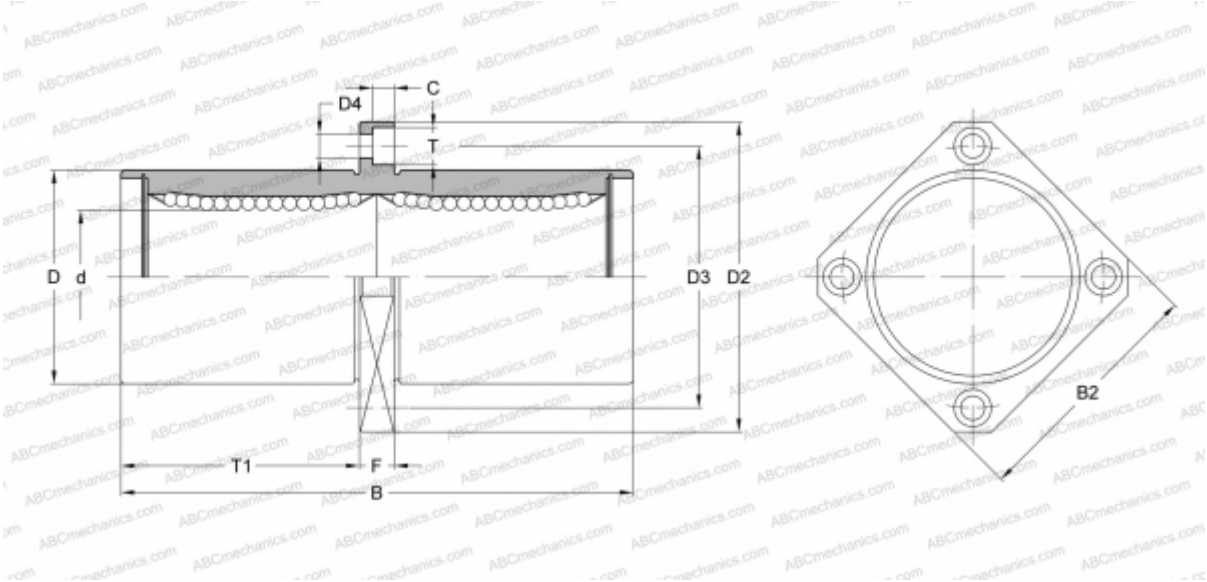

Technical specification

DIMENSIONS, MM	
d	25,000
D	40,000
B	112,000
D2	62,000
D3	51,000
D4	5,500
B2	50,000
T	9,000
T1	52,000
C	5,100
F	8
WEIGHT, KG	0,500
MANUFACTURER	NB