# SMSTC 20GUU NB

Linear bushing

TYPE: Shaft guidance systems, Linear bushing, Middle flange location, Oval type, Type SMTC, Asian standard, Corrosion resistance, Plastic cage (NB)

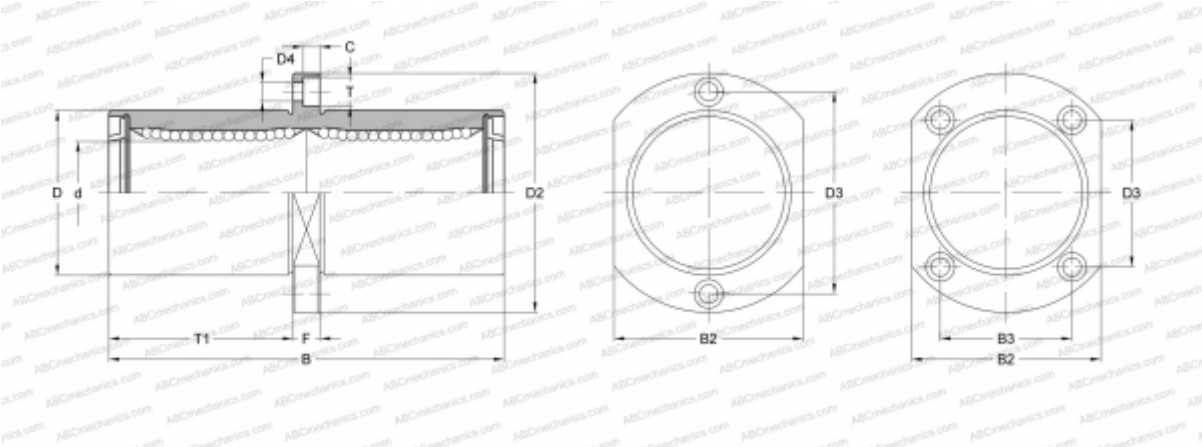


## Technical specification

| DIMENSIONS, MM | |
|---|---|
| d | 20,000 |
| D | 32,000 |
| B | 80,000 |
| D2 | 54,000 |
| D3 | 36,000 |
| D4 | 5,500 |
| B2 | 38,000 |
| B3 | 24,000 |
| T | 9,000 |
| T1 | 36,000 |
| C | 5,100 |
| F | 8 |
| **WEIGHT, KG** | 0,247 |
| **MANUFACTURER** | NB |