SMSK 16WUU-E NB

Linear bushing

TYPE: Shaft guidance systems, Linear bushing, Pilot flange location, Square type, double length, Type SMK..W..E, Asian standard, Corrosion resistance, Stainless steel cage (NB)

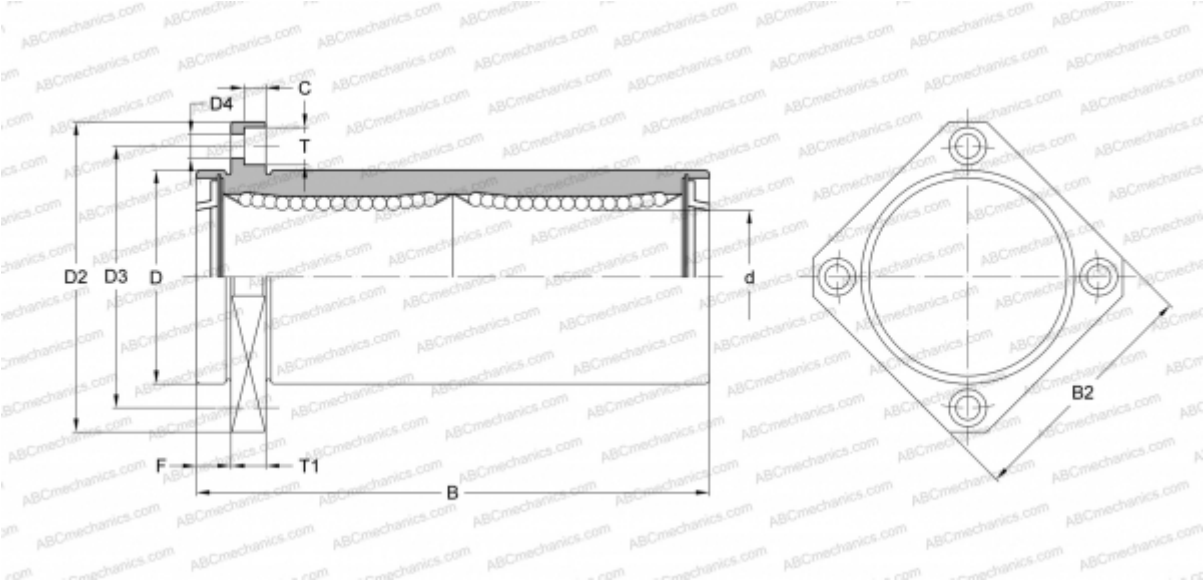

Technical specification

DIMENSIONS, MM	
d	16,000
D	28,000
B	70,000
D2	48,000
D3	38,000
D4	4,500
B2	37,000
T	7,500
T1	6,000
C	4,100
F	6
WEIGHT, KG	0,165
MANUFACTURER	NB