SMT 30WUU-E NB

Linear bushing

TYPE: Shaft guidance systems, Linear bushing, Pilot flange location, Oval type, double length, Type SMT..W..E, Asian standard, Steel cage (NB)

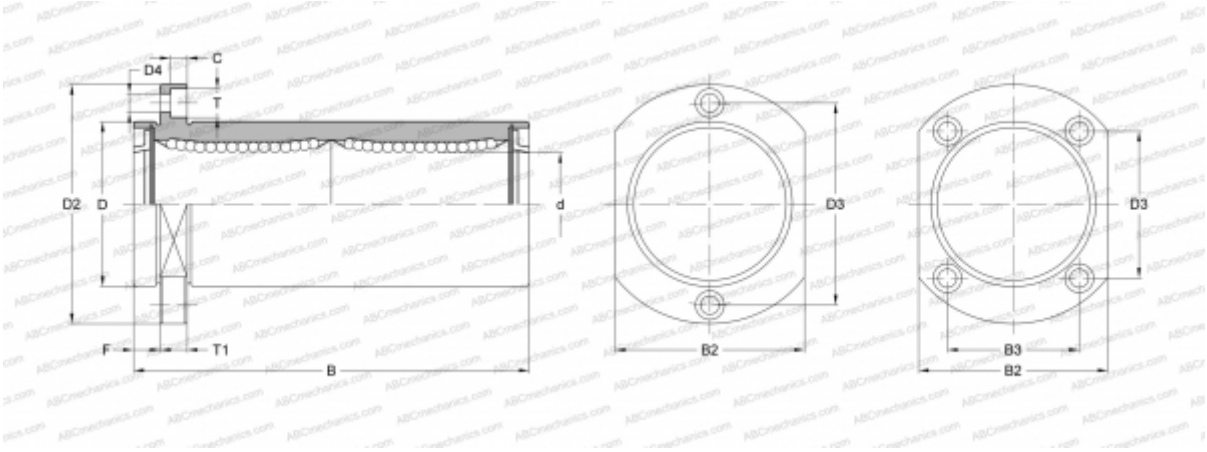

Technical specification

DIMENSIONS, MM	
d	30,000
D	45,000
B	123,000
D2	74,000
D3	49,000
D4	6,600
B2	51,000
B3	35,000
T	11,000
T1	10,000
C	6,100
F	10
WEIGHT, KG	0,645
MANUFACTURER	NB