SMT 13GWUU-E NB

Linear bushing

TYPE: Shaft guidance systems, Linear bushing, Pilot flange location, Oval type, double length, Type SMT..W..E, Asian standard, Plastic cage (NB)

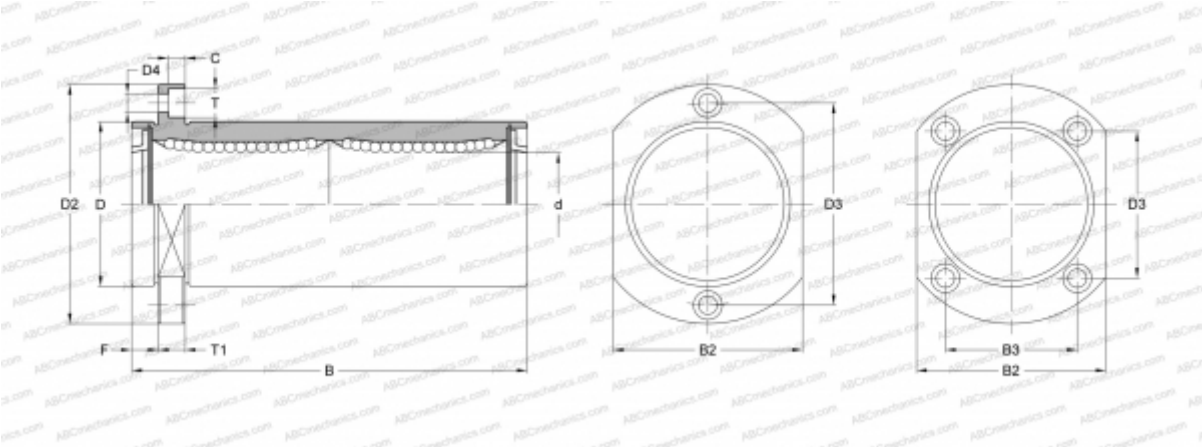

Technical specification

DIMENSIONS, MM	
d	13,000
D	23,000
B	61,000
D2	43,000
D3	33,000
D4	4,500
B2	29,000
T	7,500
T1	6,000
C	4,100
F	6
WEIGHT, KG	0,123
MANUFACTURER	NB