SMST 16GWUU-E NB

Linear bushing

TYPE: Shaft guidance systems, Linear bushing, Pilot flange location, Oval type, double length, Type SMT..W..E, Asian standard, Corrosion resistance, Plastic cage (NB)

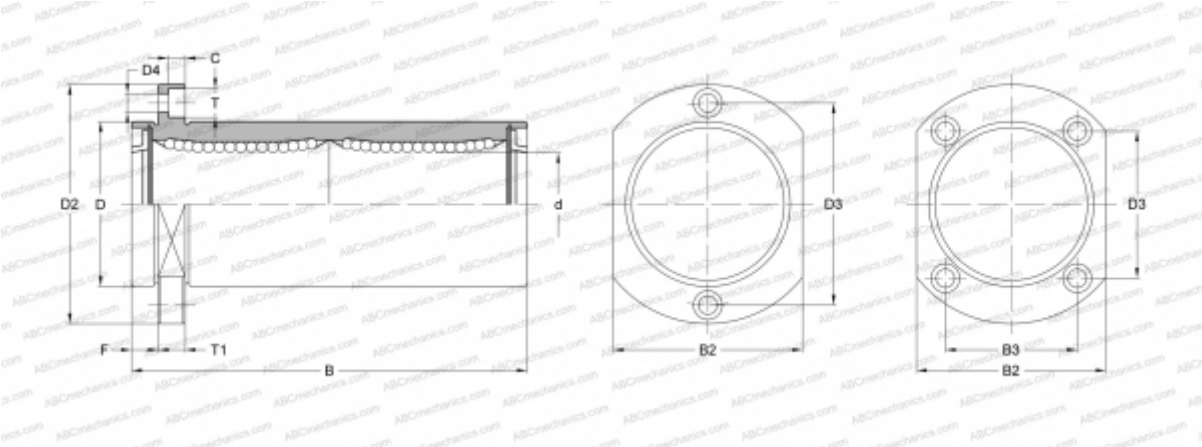

Technical specification

DIMENSIONS, MM	
d	16,000
D	28,000
B	70,000
D2	48,000
D3	31,000
D4	4,500
B2	34,000
B3	22,000
T	7,500
T1	6,000
C	4,100
F	6
WEIGHT, KG	0,182
MANUFACTURER	NB