TRF 25UU NB

Linear bushing

TYPE: Shaft guidance systems, Linear bushing, With flange, Circular type, three length, Type TRF, Asian standard, Steel cage (NB)

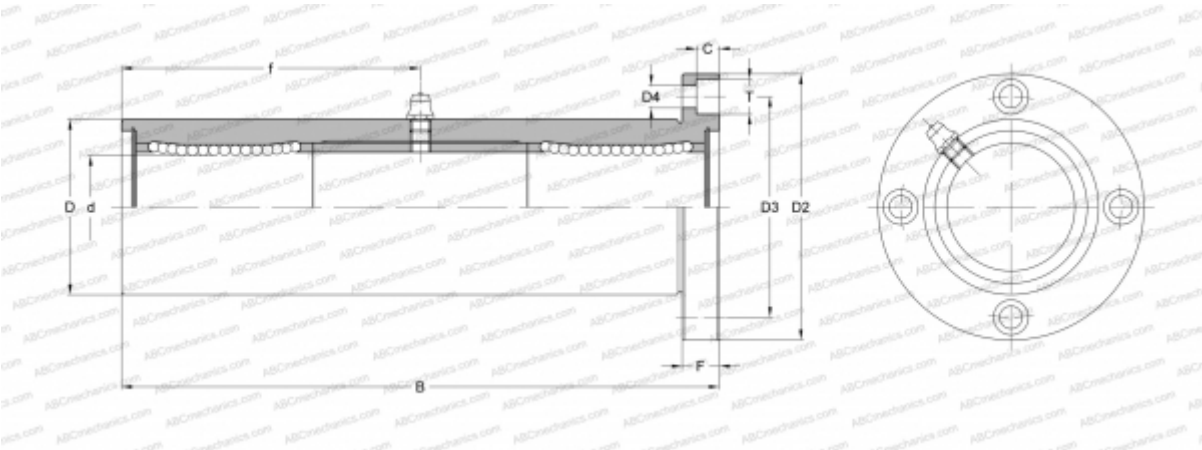

Technical specification

DIMENSIONS, MM	
d	25,000
D	45,000
B	165,000
D2	74,000
D3	60,000
D4	6,600
T	11,000
f	82,500
C	6,100
F	10
WEIGHT, KG	1,244
MANUFACTURER	NB