TRK 20GUU NB

Linear bushing

TYPE: Shaft guidance systems, Linear bushing, With flange, Square type, three length, Type TRK, Asian standard, Plastic cage (NB)

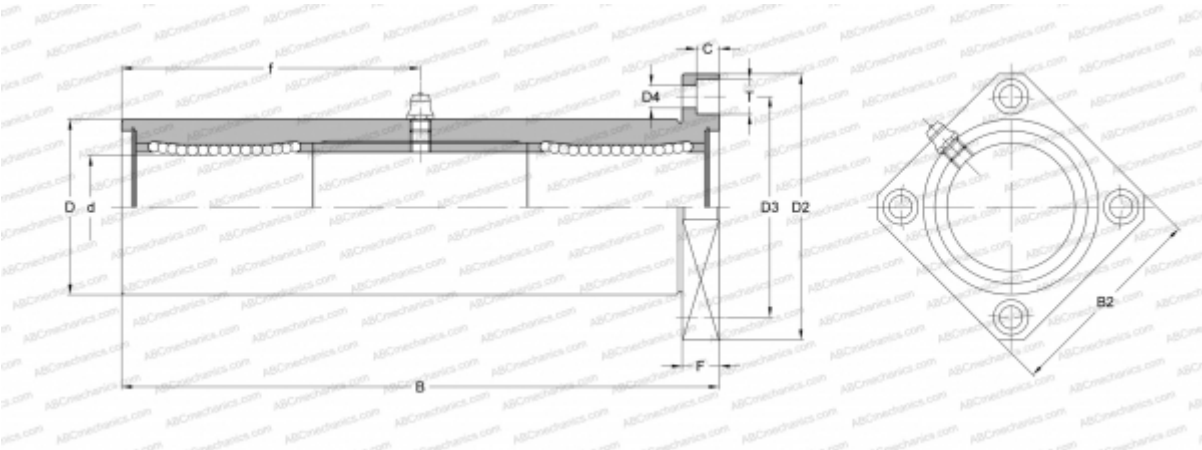

Technical specification

DIMENSIONS, MM	
d	20,000
D	40,000
B	118,000
D2	62,000
D3	51,000
D4	5,500
B2	50,000
T	9,000
f	59,000
C	5,100
F	8
WEIGHT, KG	0,714
MANUFACTURER	NB