KB 4 NB

Linear bushing

TYPE: Shaft guidance systems, Linear bushing, Standard, Close type, Type KB, European standard, Steel cage (NB)

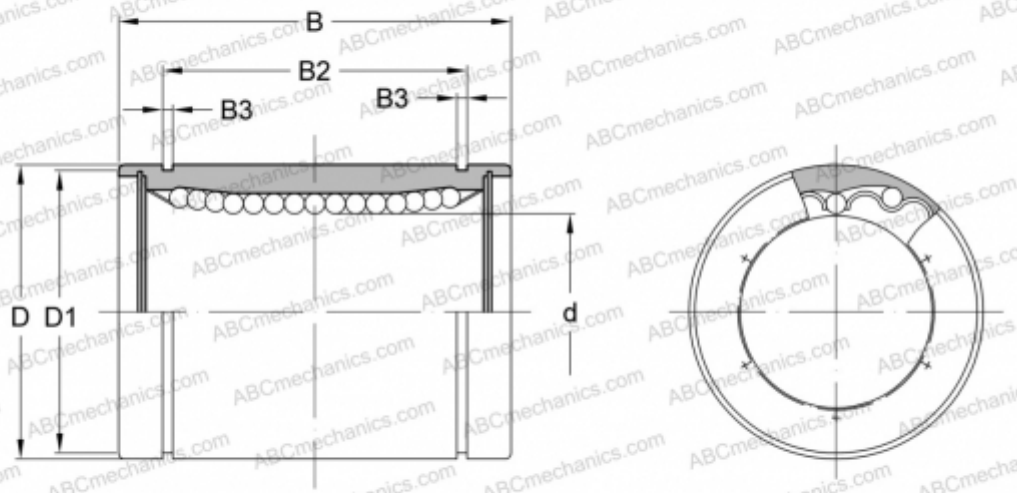

Technical specification

DIMENSIONS, MM	
d	4,000
D	8,000
B	12,000
WEIGHT, KG	0,002
MANUFACTURER	NB