KB 3G NB

Linear bushing

TYPE: Shaft guidance systems, Linear bushing, Standard, Close type, Type KB, European standard, Plastic cage (NB)

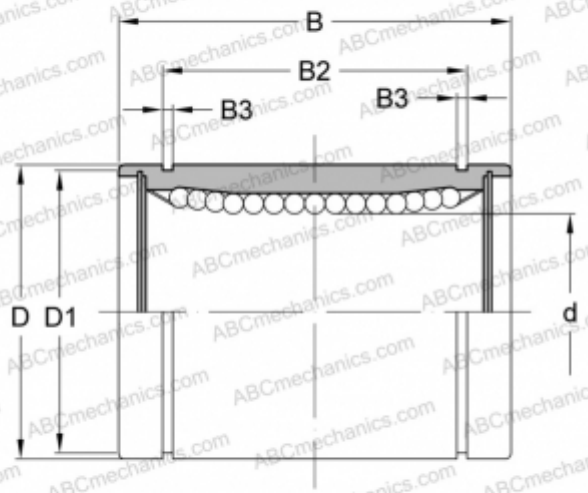

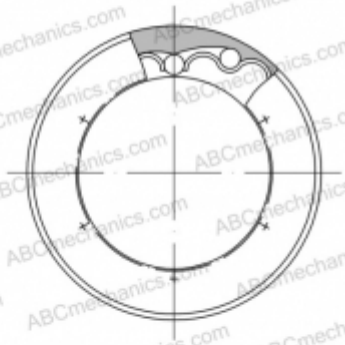

Technical specification

DIMENSIONS, MM	
d	3,000
D	7,000
B	10,000
WEIGHT, KG	0,001
MANUFACTURER	NB