KBS 20 NB

Linear bushing

TYPE: Shaft guidance systems, Linear bushing, Standard, Close type, Type KB, European standard, Corrosion resistance, Stainless steel cage (NB)

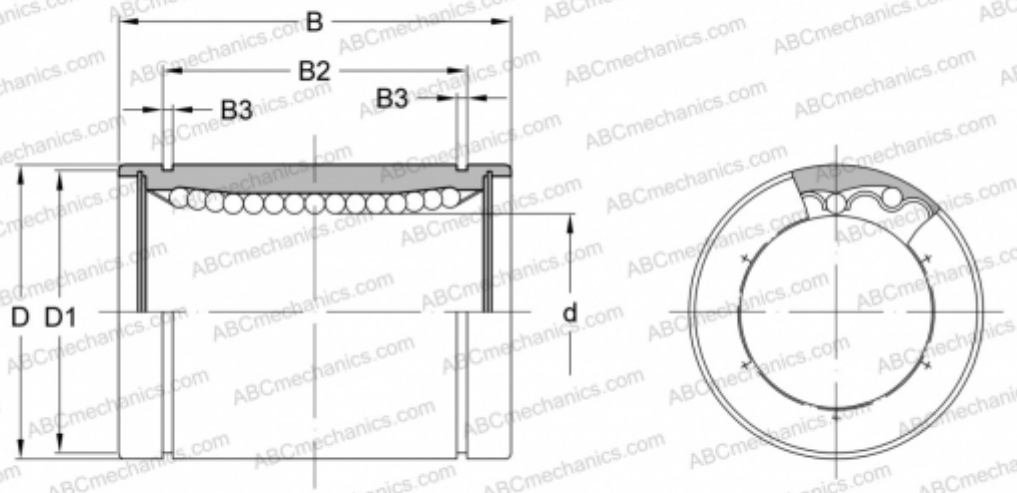

Technical specification

DIMENSIONS, MM	
d	20,000
D	32,000
B	45,000
D1	30,300
B2	31,500
B3	1,600
WEIGHT, KG	0,102
MANUFACTURER	NB