KBS 40 NB

Linear bushing

TYPE: Shaft guidance systems, Linear bushing, Standard, Close type, Type KB, European standard, Corrosion resistance, Stainless steel cage (NB)

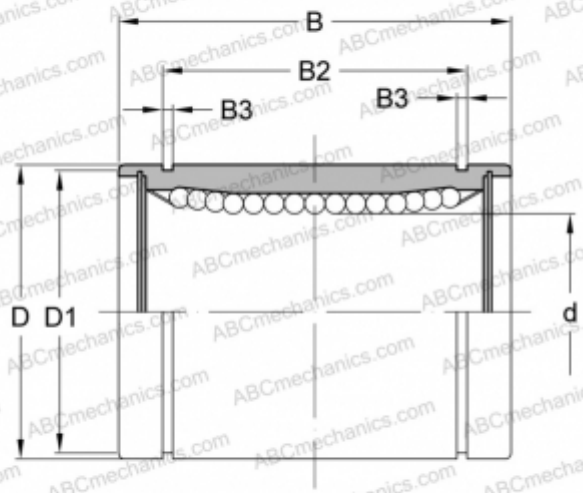

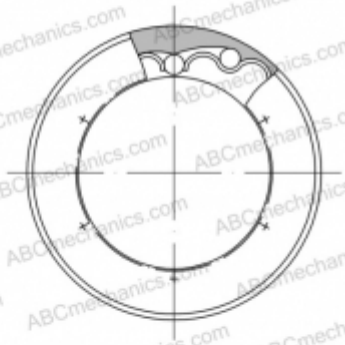

Technical specification

DIMENSIONS, MM	
d	40,000
D	62,000
B	80,000
D1	59,000
B2	60,600
B3	2,150
WEIGHT, KG	0,770
MANUFACTURER	NB