# KBS 25G NB

Linear bushing

TYPE: Shaft guidance systems, Linear bushing, Standard, Close type, Type KB, European standard, Corrosion resistance, Plastic cage (NB)

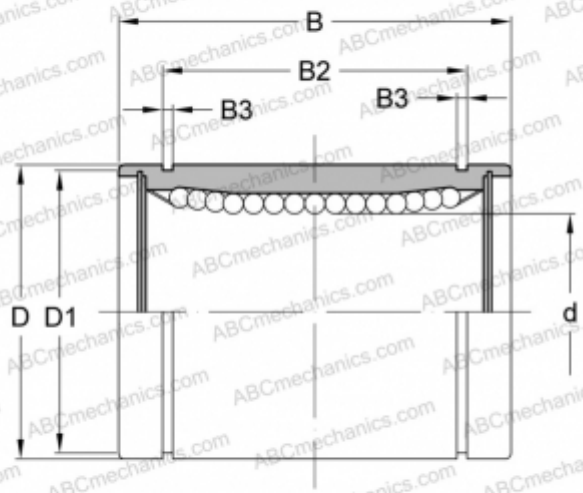


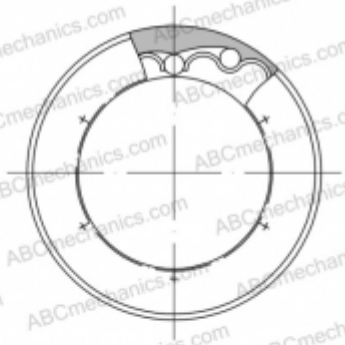

## Technical specification

| DIMENSIONS, MM | |
|---|---|
| d | 25,000 |
| D | 40,000 |
| B | 58,000 |
| D1 | 37,500 |
| B2 | 44,100 |
| B3 | 1,850 |
| **WEIGHT, KG** | 0,235 |
| **MANUFACTURER** | NB |