KB 20G-AJ NB

Linear bushing

TYPE: Shaft guidance systems, Linear bushing, Standard, Adjustable type, Type KB..AJ, European standard, Plastic cage (NB)

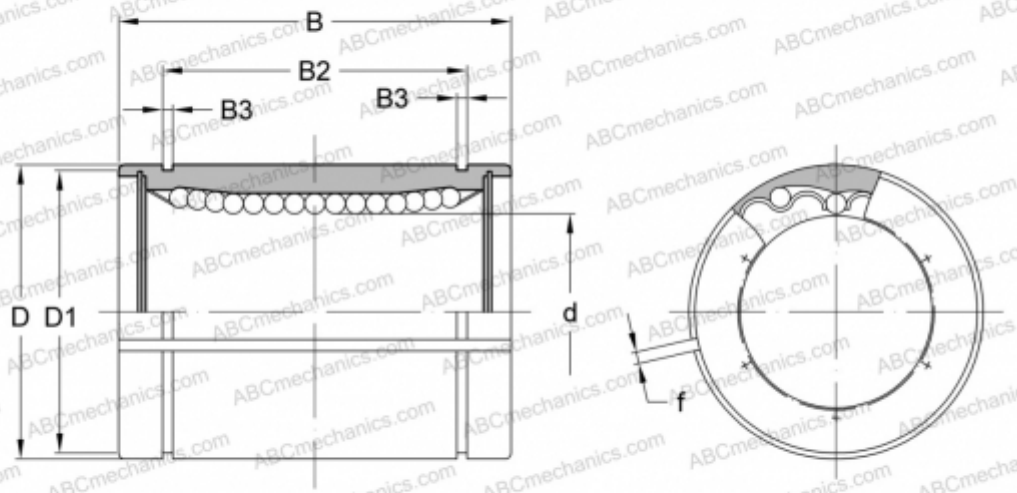

Technical specification

DIMENSIONS, MM	
d	20,000
D	32,000
B	45,000
D1	30,300
B2	31,500
B3	1,600
f	2,000
WEIGHT, KG	0,100
MANUFACTURER	NB