KB 30G-AJ NB

Linear bushing

TYPE: Shaft guidance systems, Linear bushing, Standard, Adjustable type, Type KB..AJ, European standard, Plastic cage (NB)

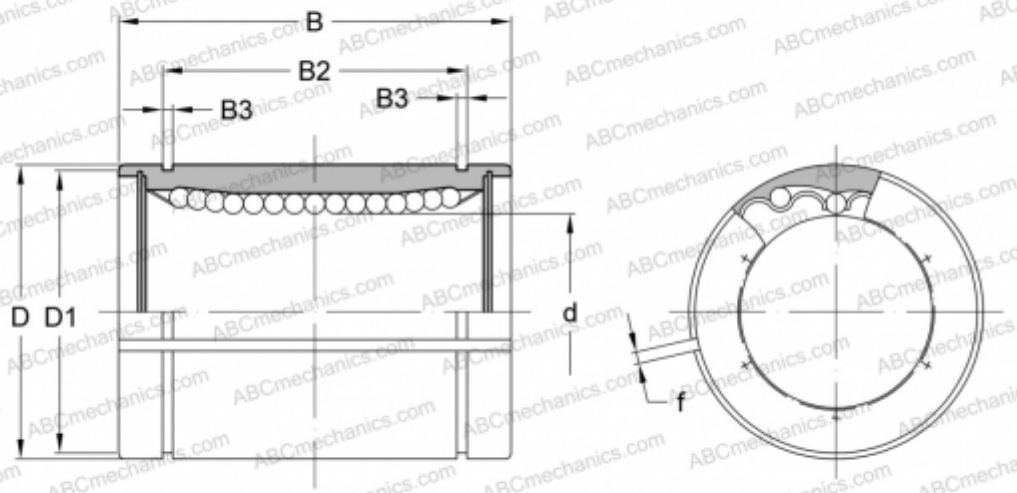

Technical specification

DIMENSIONS, MM	
d	30,000
D	47,000
B	68,000
D1	44,500
B2	52,100
B3	1,850
f	2,000
WEIGHT, KG	0,355
MANUFACTURER	NB