KBS 16-OP

Linear bushing

TYPE: Shaft guidance systems, Linear bushing, Standard, Open type for support rail, Type KB..OP, European standard, Corrosion resistance, Stainless steel cage (NB)

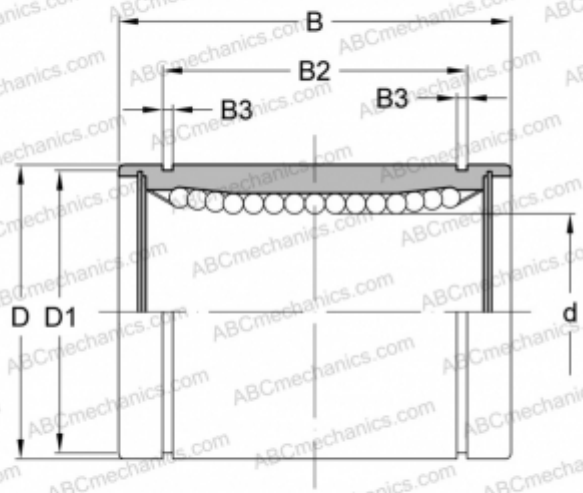

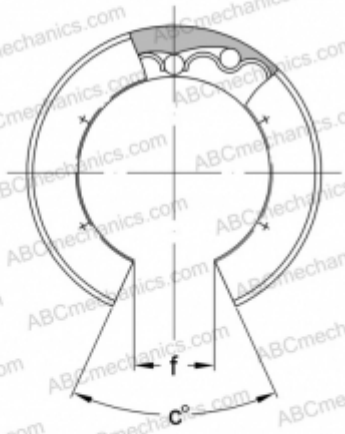

Technical specification

DIMENSIONS, MM	
d	16,000
D	26,000
B	36,000
D1	24,900
B2	24,900
B3	1,300
f	10,000
c	78
WEIGHT, KG	0,048