KBS 60-OP

Linear bushing

TYPE: Shaft guidance systems, Linear bushing, Standard, Open type for support rail, Type KB..OP, European standard, Corrosion resistance, Stainless steel cage (NB)

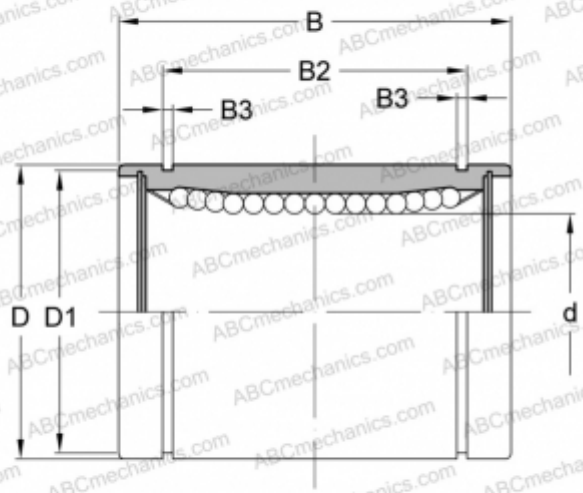

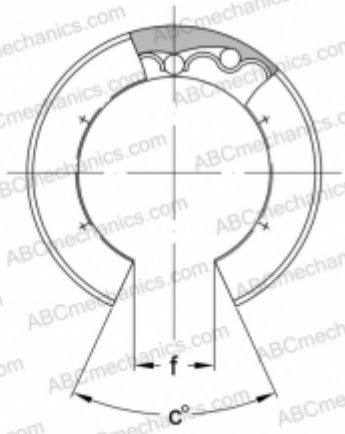

Technical specification

DIMENSIONS, MM	
d	60,000
D	90,000
B	125,000
D1	86,500
B2	101,700
B3	3,150
f	27,200
c	54
WEIGHT, KG	1,900