KB 25GW NB

Linear bushing

TYPE: Shaft guidance systems, Linear bushing, Standard, Close type, double length, Type KB..W, European standard, Plastic cage (NB)

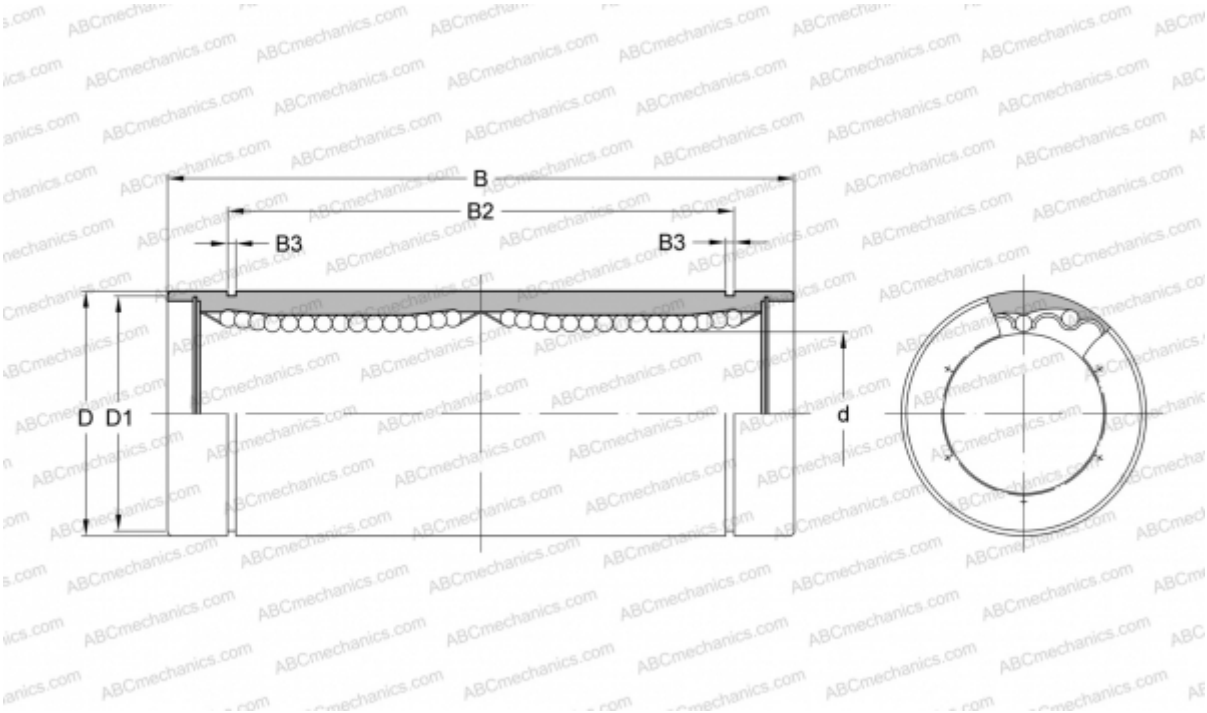

Technical specification

DIMENSIONS, MM	
d	25,000
D	40,000
B	112,000
D1	38,000
B2	82,000
B3	1,850
WEIGHT, KG	0,430
MANUFACTURER	NB