KBS 20GW NB

Linear bushing

TYPE: Shaft guidance systems, Linear bushing, Standard, Close type, double length, Type KB..W, European standard, Corrosion resistance, Plastic cage (NB)

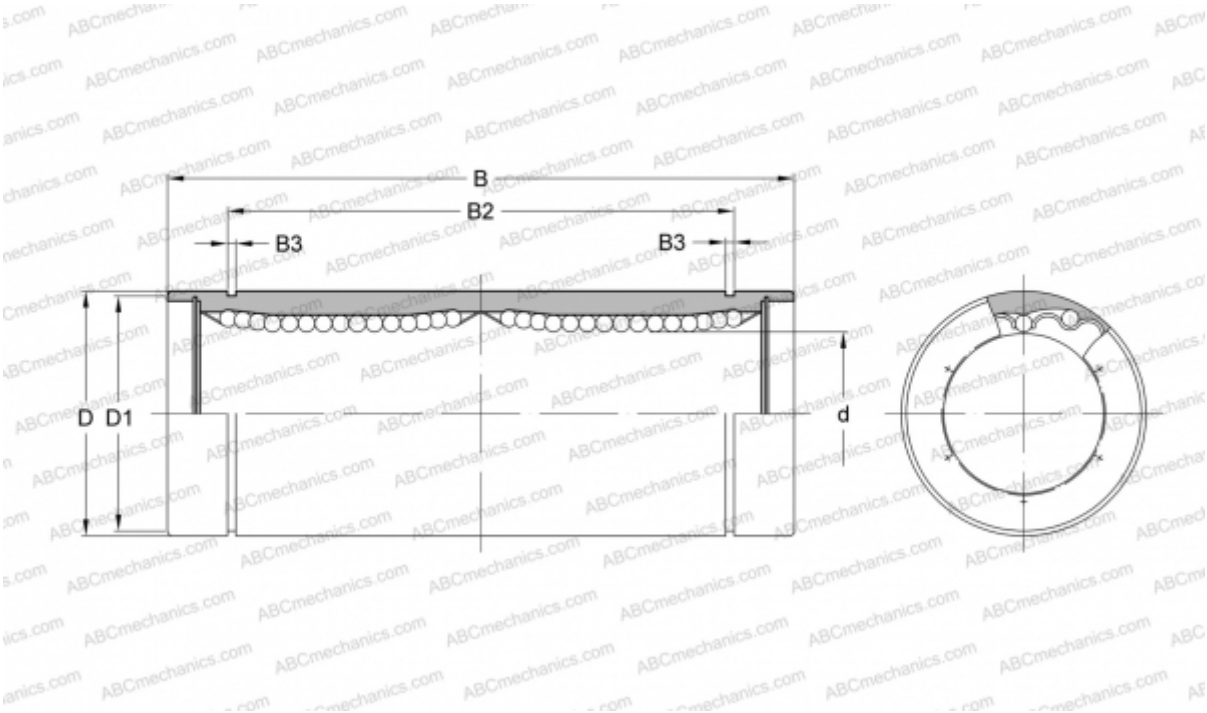

Technical specification

DIMENSIONS, MM	
d	20,000
D	32,000
B	80,000
D1	30,500
B2	61,000
B3	1,600
WEIGHT, KG	0,180
MANUFACTURER	NB