KBSF 60G NB

Linear bushing

TYPE: Shaft guidance systems, Linear bushing, With flange, Circular type, Type KBF, European standard, Corrosion resistance, Plastic cage (NB)

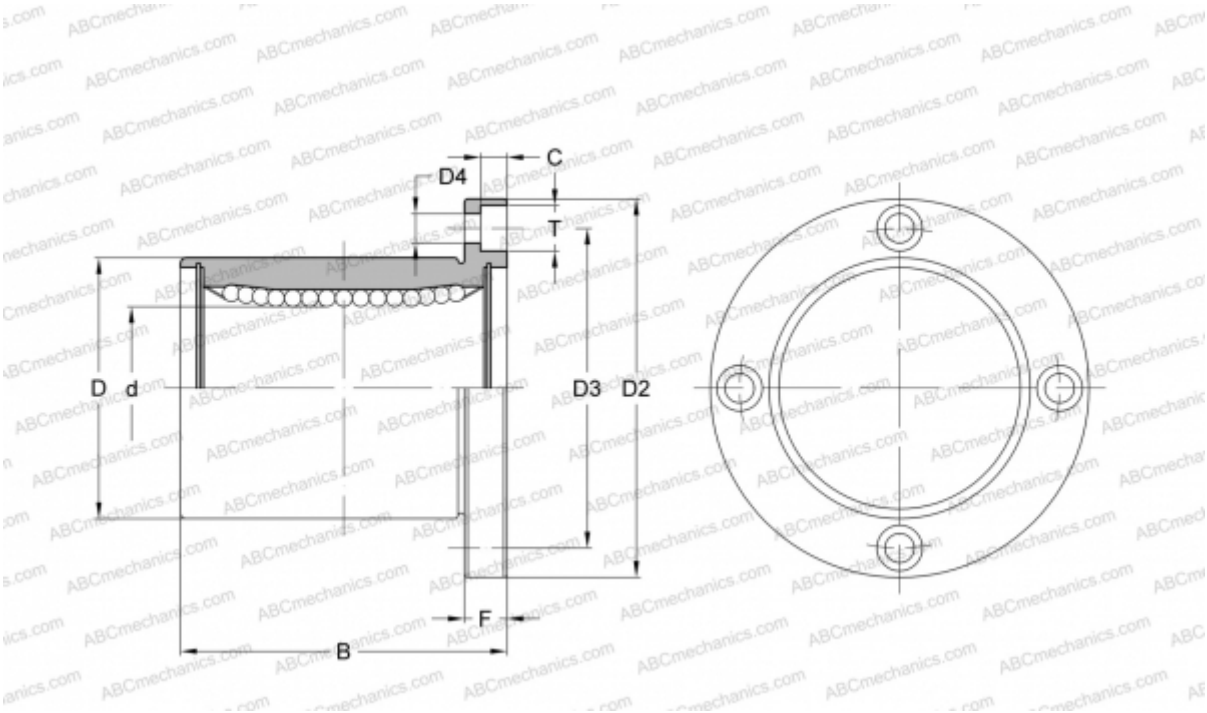

Technical specification

DIMENSIONS, MM	
d	60,000
D	90,000
B	125,000
D2	134,000
D3	112,000
F	18
WEIGHT, KG	3,220
MANUFACTURER	NB