KBK 16G NB

Linear bushing

TYPE: Shaft guidance systems, Linear bushing, With flange, Square type, Type KBK, European standard, Plastic cage (NB)

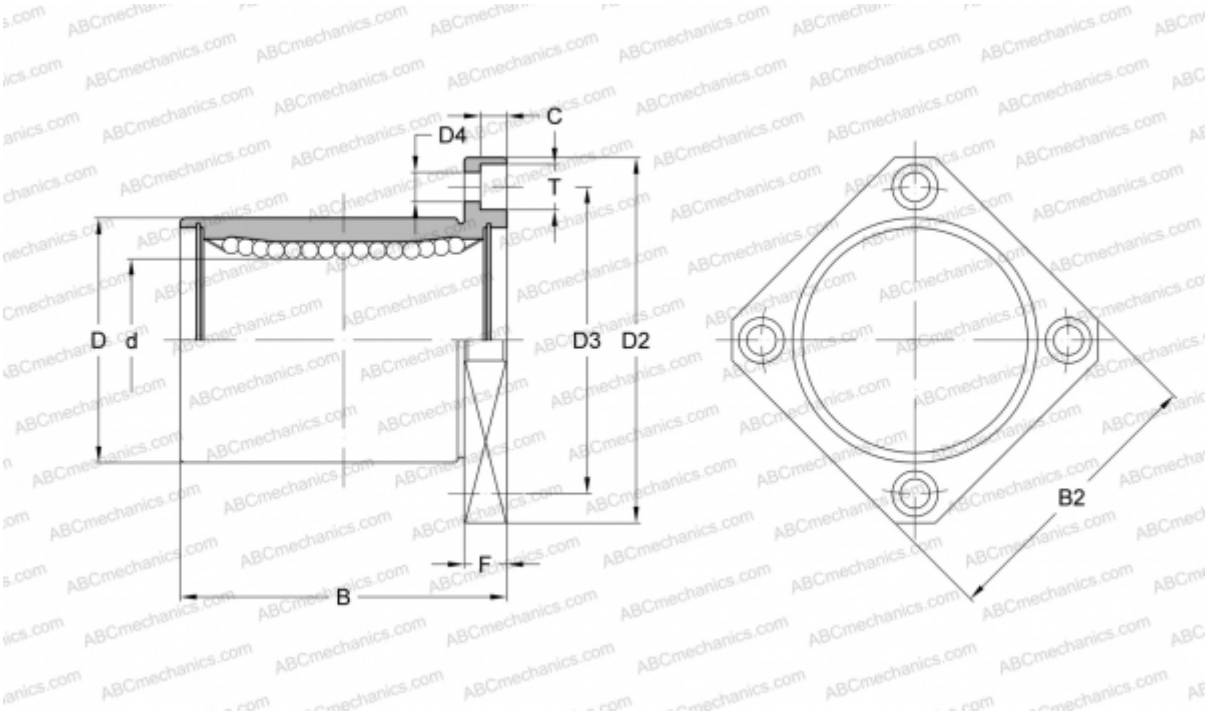

Technical specification

DIMENSIONS, MM	
d	16,000
D	26,000
B	36,000
D2	46,000
D3	36,000
D4	4,500
B2	35,000
T	7,500
C	4,100
F	6
WEIGHT, KG	0,090
MANUFACTURER	NB