KBSK 60G NB

Linear bushing

TYPE: Shaft guidance systems, Linear bushing, With flange, Square type, Type KBK, European standard, Corrosion resistance, Plastic cage (NB)

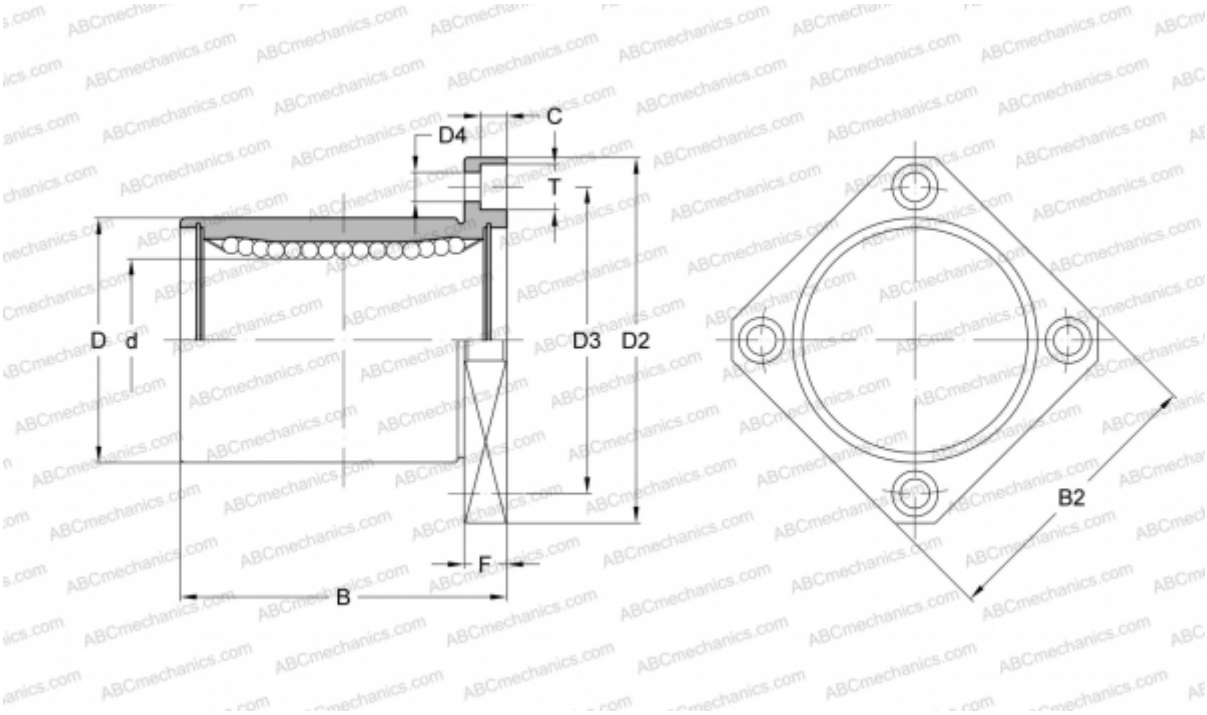

Technical specification

DIMENSIONS, MM	
d	60,000
D	90,000
B	125,000
D2	134,000
D3	112,000
D4	11,000
B2	106,000
T	17,000
C	11,100
F	18
WEIGHT, KG	2,780
MANUFACTURER	NB