KBF 50W NB

Linear bushing

TYPE: Shaft guidance systems, Linear bushing, With flange, Circular type, double length, Type KBF..W, European standard, Steel cage (NB)

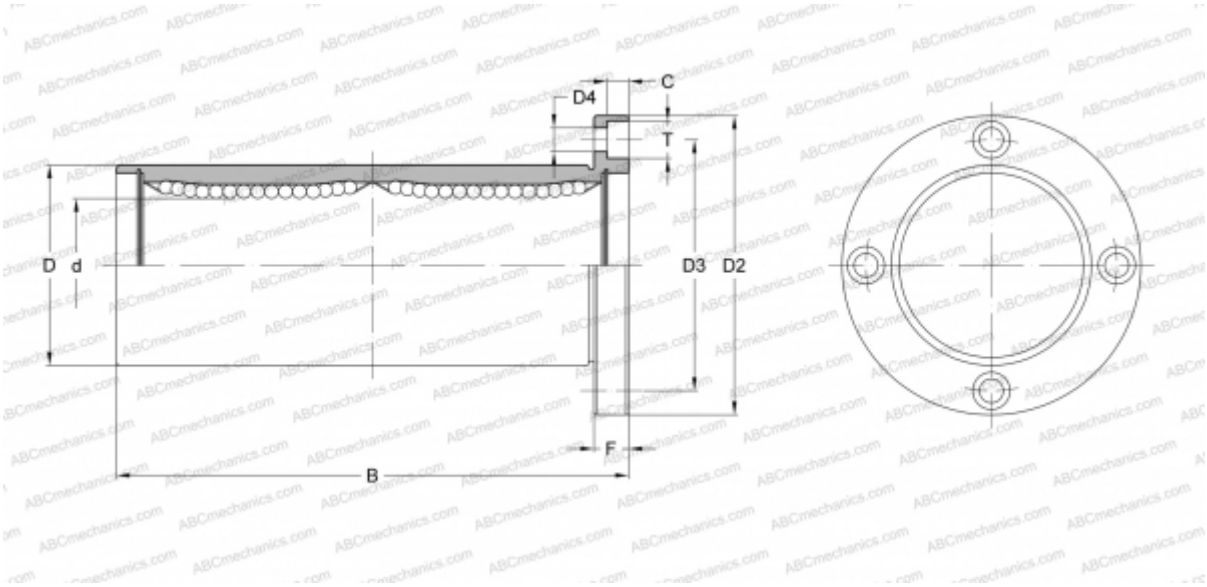

Technical specification

DIMENSIONS, MM	
d	50,000
D	75,000
B	192,000
D2	112,000
D3	94,000
D4	9,000
T	14,000
C	8,100
F	13
WEIGHT, KG	2,820
MANUFACTURER	NB