KBSF 25GW NB

Linear bushing

TYPE: Shaft guidance systems, Linear bushing, With flange, Circular type, double length, Type KBF..W, European standard, Corrosion resistance, Plastic cage (NB)

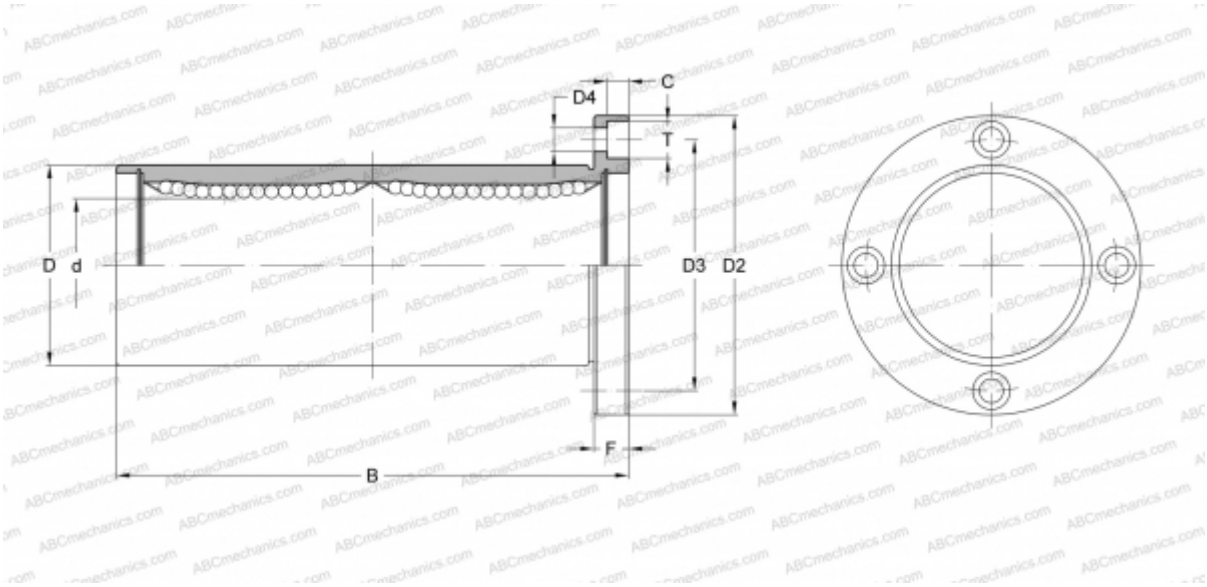

Technical specification

DIMENSIONS, MM	
d	25,000
D	40,000
B	112,000
D2	62,000
D3	51,000
D4	5,500
T	9,000
C	5,100
F	8

WEIGHT, KG	0,540
MANUFACTURER	NB