KBSFC 60 NB

Linear bushing

TYPE: Shaft guidance systems, Linear bushing, Middle flange location, Circular type, Type KBFC, European standard, Corrosion resistance, Stainless steel cage (NB)

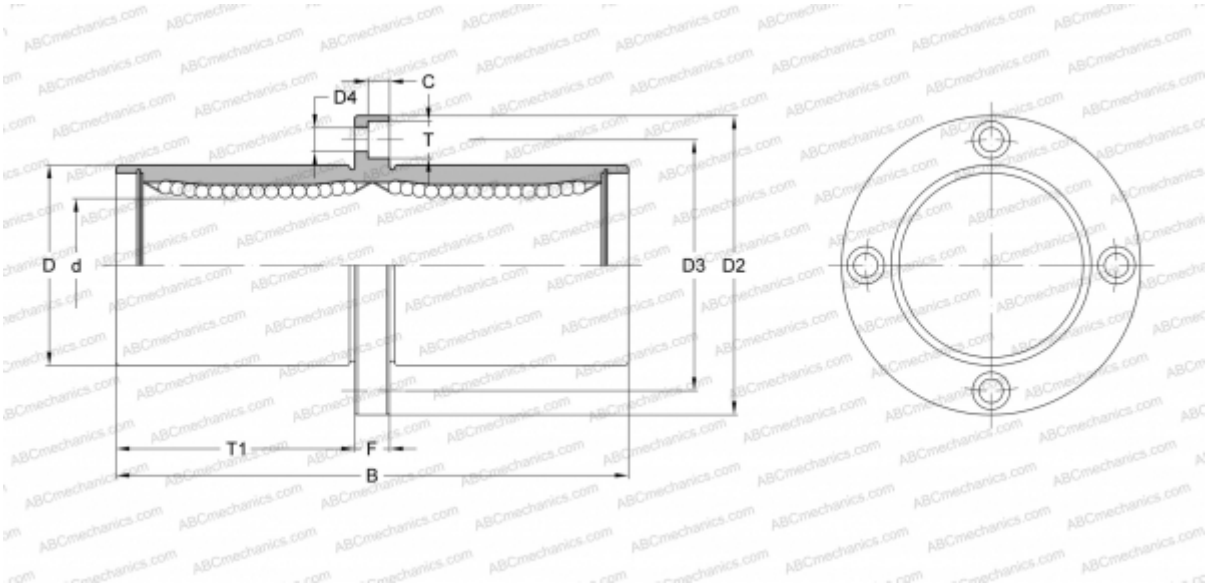

Technical specification

DIMENSIONS, MM	
d	60,000
D	90,000
B	209,000
D2	134,000
D3	112,000
D4	11,000
T	17,000
T1	95,500
C	11,100
F	18
WEIGHT, KG	4,920
MANUFACTURER	NB