KBKC 8 NB

Linear bushing

TYPE: Shaft guidance systems, Linear bushing, Middle flange location, Square type, Type KBKC, European standard, Steel cage (NB)

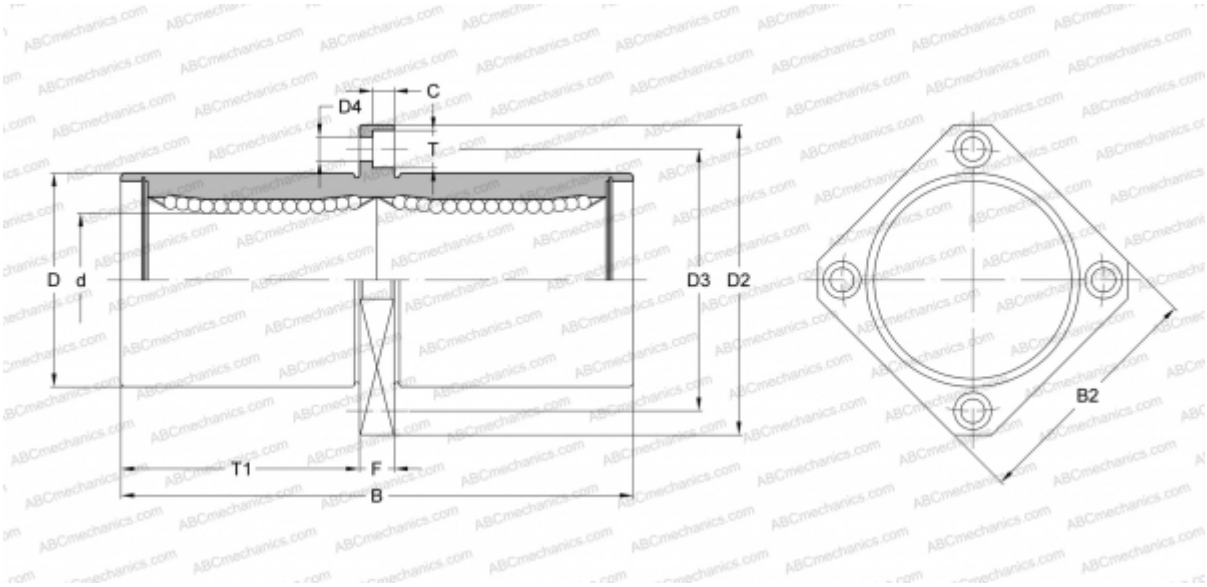

Technical specification

DIMENSIONS, MM	
d	8,000
D	16,000
B	46,000
D2	32,000
D3	24,000
D4	3,500
B2	25,000
T	6,000
T1	20,500
C	3,100
F	5
WEIGHT, KG	0,051
MANUFACTURER	NB