KBKC 12G NB

Linear bushing

TYPE: Shaft guidance systems, Linear bushing, Middle flange location, Square type, Type KBKC, European standard, Plastic cage (NB)

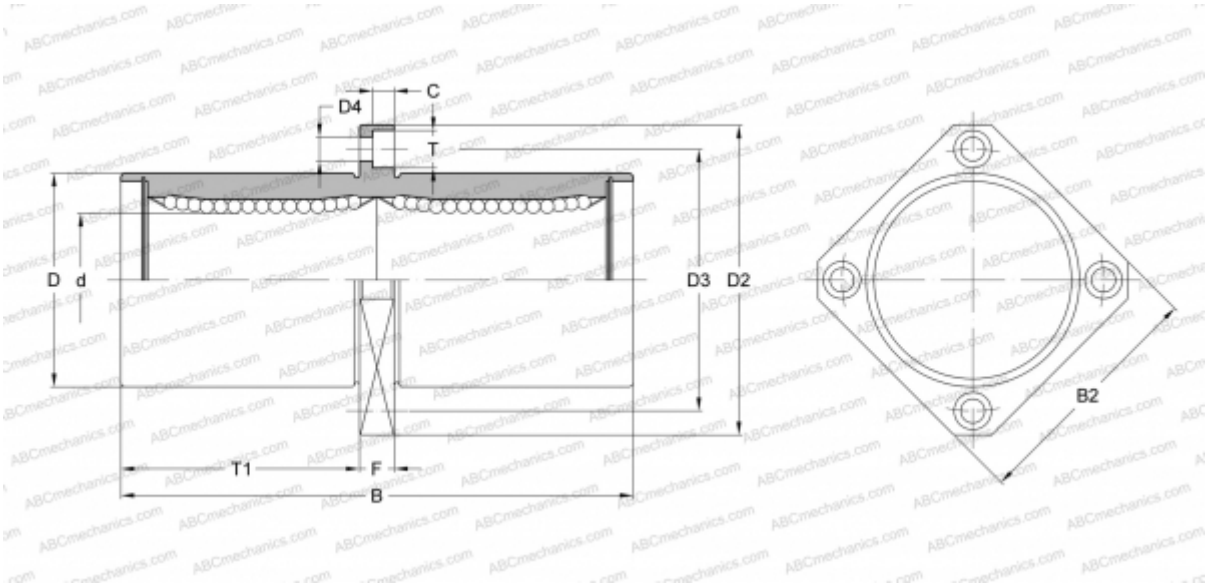

Technical specification

DIMENSIONS, MM	
d	12,000
D	22,000
B	61,000
D2	42,000
D3	32,000
D4	4,500
B2	32,000
T	7,500
T1	27,500
C	4,100
F	6
WEIGHT, KG	0,090
MANUFACTURER	NB