KBKC 30G NB

Linear bushing

TYPE: Shaft guidance systems, Linear bushing, Middle flange location, Square type, Type KBKC, European standard, Plastic cage (NB)

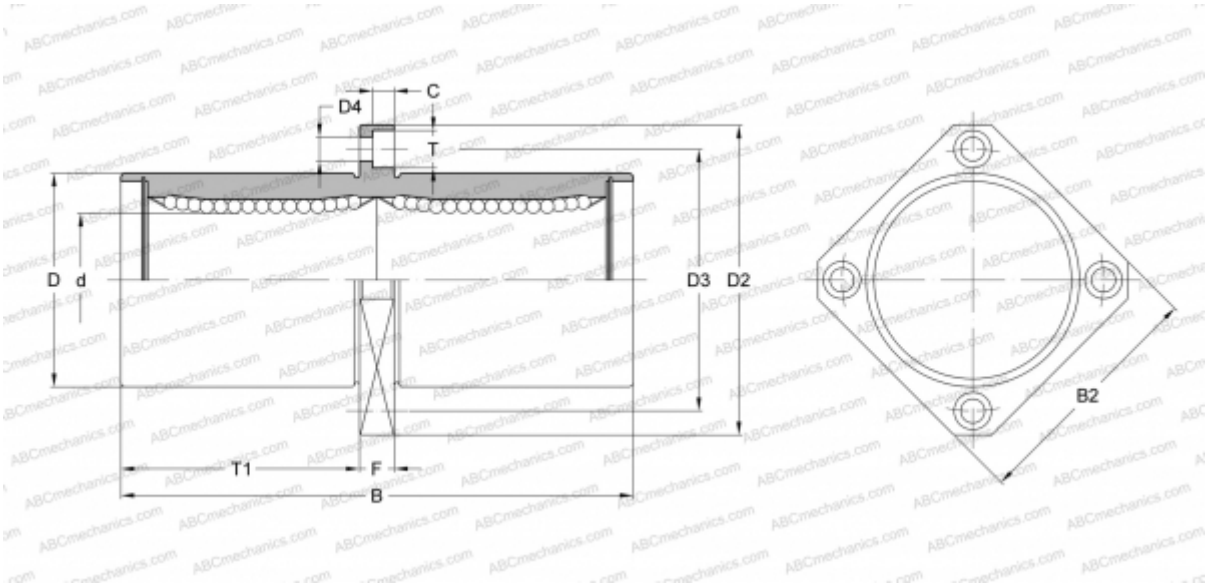

Technical specification

DIMENSIONS, MM	
d	30,000
D	47,000
B	123,000
D2	76,000
D3	62,000
D4	6,600
B2	60,000
T	11,000
T1	56,500
C	6,100
F	10
WEIGHT, KG	0,720
MANUFACTURER	NB