KBSKC 50 NB

Linear bushing

TYPE: Shaft guidance systems, Linear bushing, Middle flange location, Square type, Type KBKC, European standard, Corrosion resistance, Stainless steel cage (NB)

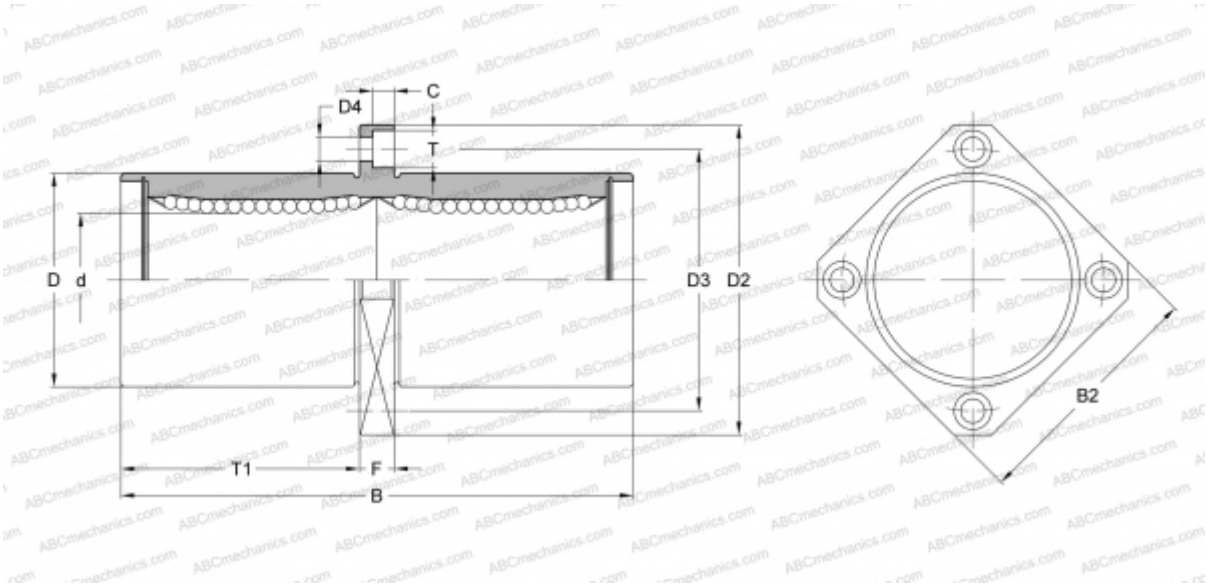

Technical specification

DIMENSIONS, MM	
d	50,000
D	75,000
B	192,000
D2	112,000
D3	94,000
D4	9,000
B2	88,000
T	14,000
T1	89,500
C	8,100
F	13
WEIGHT, KG	2,620
MANUFACTURER	NB