# KBSKC 60 NB

Linear bushing

TYPE: Shaft guidance systems, Linear bushing, Middle flange location, Square type, Type KBKC, European standard, Corrosion resistance, Stainless steel cage (NB)

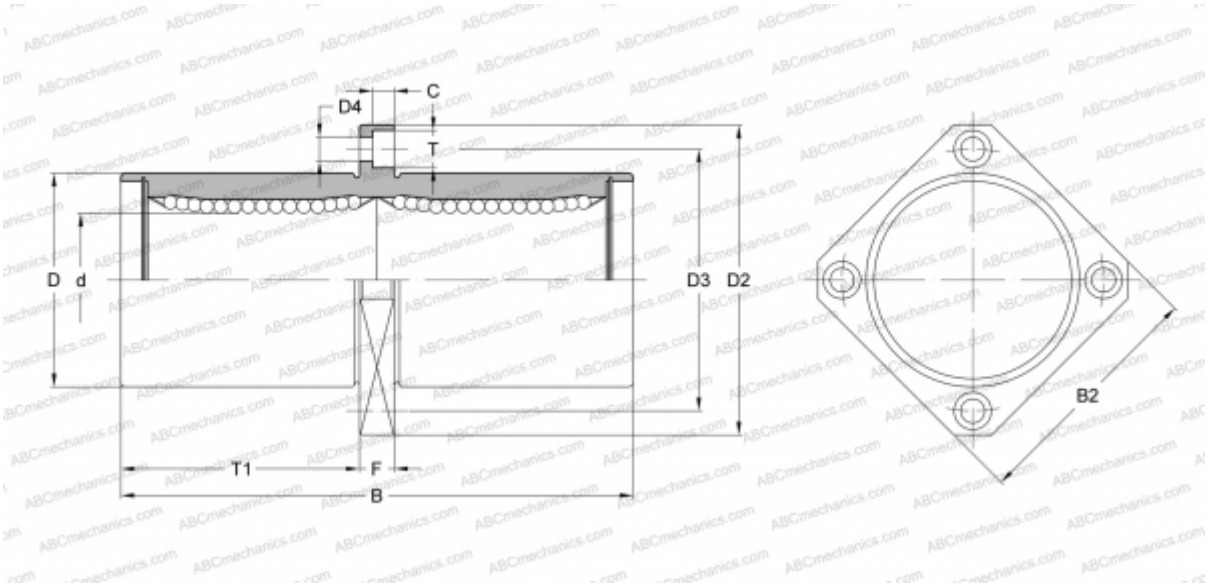


## Technical specification

| DIMENSIONS, MM | |
|---|---|
| d | 60,000 |
| D | 90,000 |
| B | 209,000 |
| D2 | 134,000 |
| D3 | 112,000 |
| D4 | 11,000 |
| B2 | 106,000 |
| T | 17,000 |
| T1 | 95,500 |
| C | 11,100 |
| F | 18 |
| **WEIGHT, KG** | 4,480 |
| **MANUFACTURER** | NB |