SW 40 NB

Linear bushing

TYPE: Shaft guidance systems, Linear bushing, Standard, Close type, Type SW, American standard, Steel cage (NB)

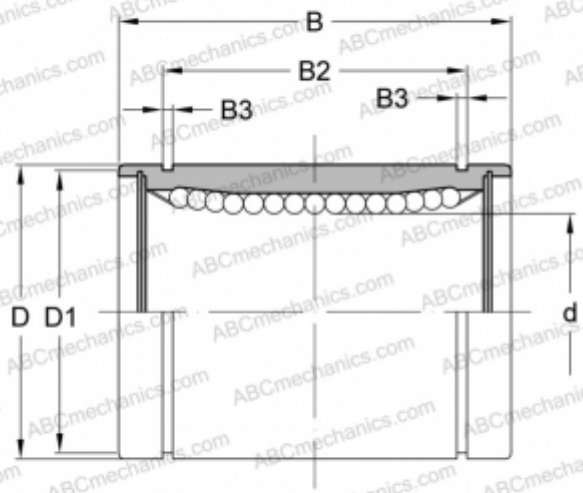

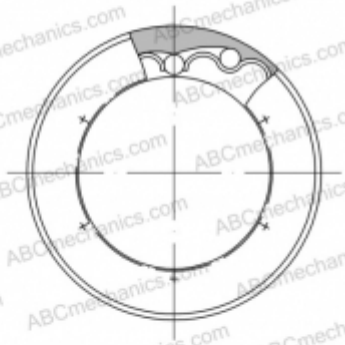

Technical specification

DIMENSIONS, MM	
d	63,500
D	95,250
B	127,000
D1	90,220
B2	100,990
B3	3,048
WEIGHT, KG	2,600
MANUFACTURER	NB