SW 16G-AJ NB

Linear bushing

TYPE: Shaft guidance systems, Linear bushing, Standard, Adjustable type, Type SW..AJ, American standard, Plastic cage (NB)

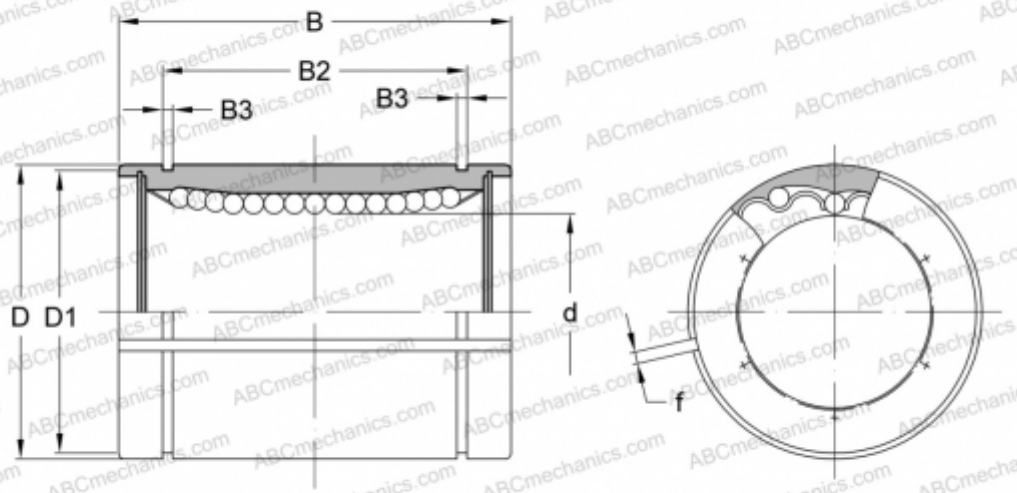

Technical specification

DIMENSIONS, MM	
d	25,400
D	39,688
B	57,150
D1	37,306
B2	44,570
B3	1,727
f	1,500
WEIGHT, KG	0,218
MANUFACTURER	NB