SWS 12G-AJ NB

Linear bushing

TYPE: Shaft guidance systems, Linear bushing, Standard, Adjustable type, Type SW..AJ, American standard, Corrosion resistance, Plastic cage (NB)

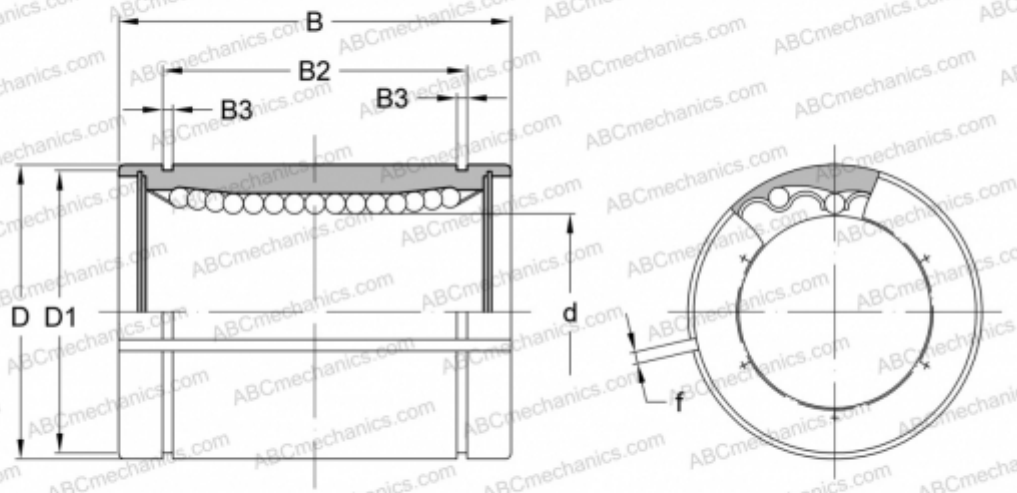

Technical specification

DIMENSIONS, MM	
d	19,050
D	31,750
B	41,275
D1	29,870
B2	29,610
B3	1,422
f	1,500
WEIGHT, KG	0,102
MANUFACTURER	NB