SWS 20G-AJ NB

Linear bushing

TYPE: Shaft guidance systems, Linear bushing, Standard, Adjustable type, Type SW..AJ, American standard, Corrosion resistance, Plastic cage (NB)

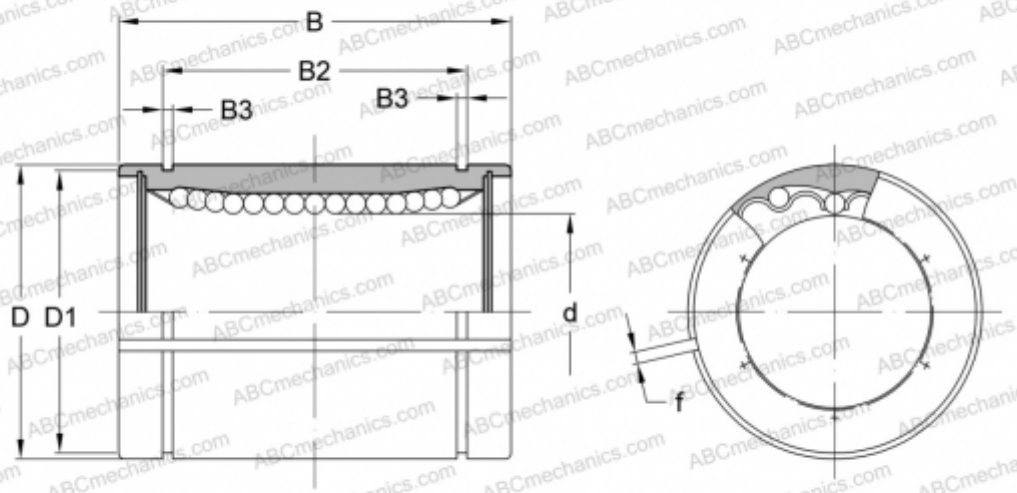

Technical specification

DIMENSIONS, MM	
d	31,750
D	50,800
B	66,675
D1	47,904
B2	50,920
B3	1,727
f	2,500
WEIGHT, KG	0,455
MANUFACTURER	NB