SWS 8G-OP NB

Linear bushing

TYPE: Shaft guidance systems, Linear bushing, Standard, Open type for support rail, Type SW..OP, American standard, Corrosion resistance, Plastic cage (NB)

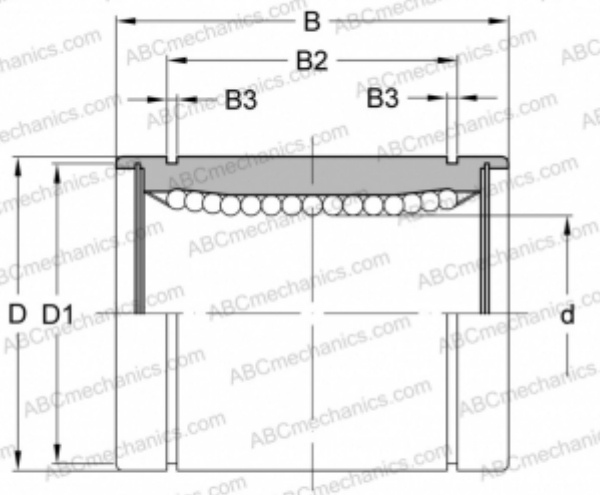

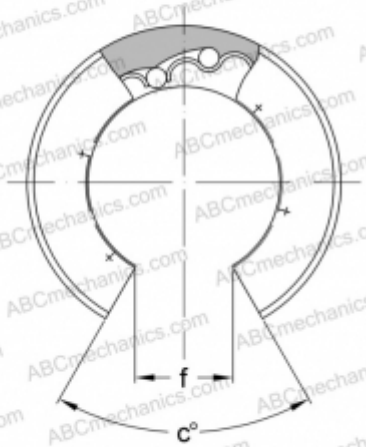

Technical specification

DIMENSIONS, MM	
d	12,700
D	22,225
B	31,750
D1	20,853
B2	24,460
B3	1,168
f	7,938
c	80
WEIGHT, KG	0,032
MANUFACTURER	NB